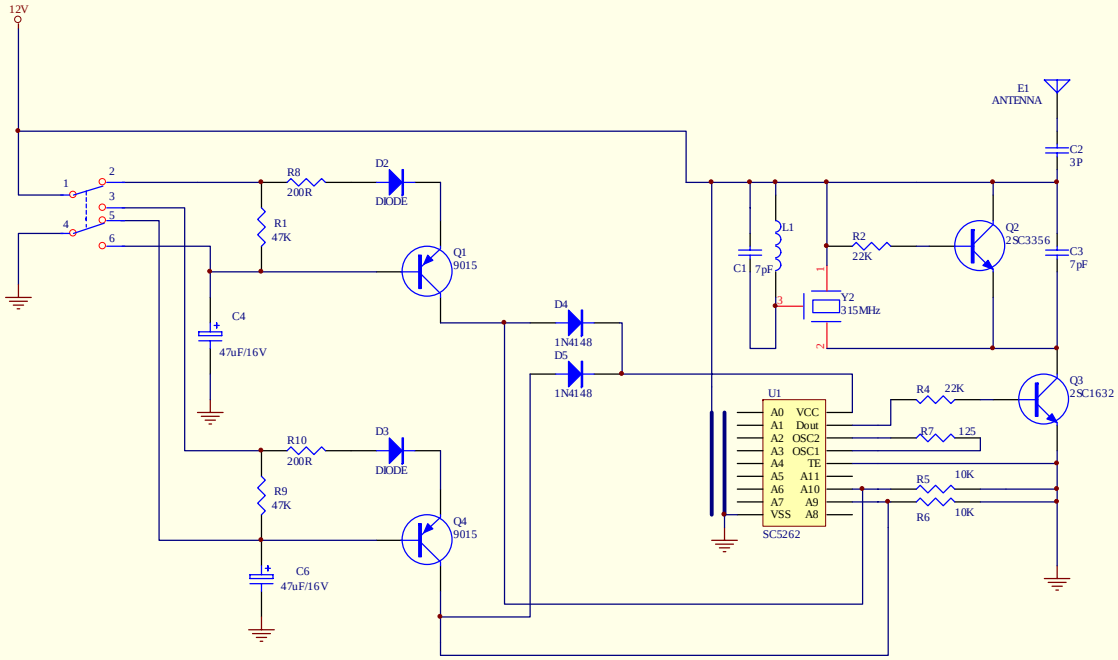

Title	KS-020		
Size B	Number		Revision
Date:	7-Sep-2000	Sheet of	
File:	E:\遥控开关\遥控开关发射板原理图.DDB	Drawn By:	