7.

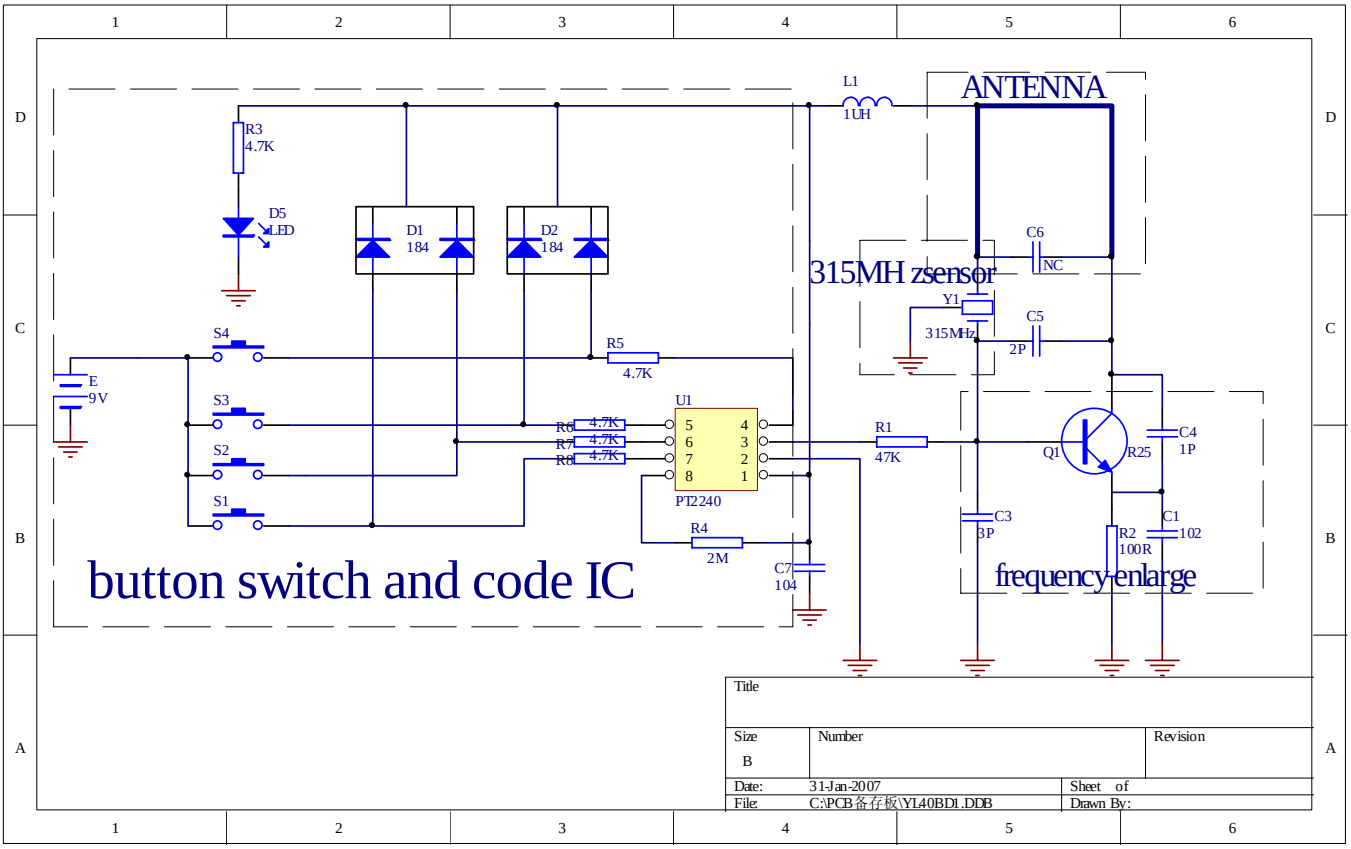
ANTENNA
L1
1UH
R3
4.7K
D5
LED
D1
184
D2
184
C6
NC
315MH zsensor
Y1
315MHz
C5
2P
S4
S3
S2
S1
E
9V
R5
4.7K
U1
R6
R7
R8
4.7K
4.7K
4.7K
PT2240
R1
47K
Q1
R25
C4
1P
C3
3P
R2
100R
C1
102
R4
2M
C7
104
button switch and code IC
frequency enlarge
Title
Size
B
Number
Revision
Date:
31-Jan-2007
Sheet of
File:
C:\PCB备存板\YL40BDI.DDB
Drawn By: