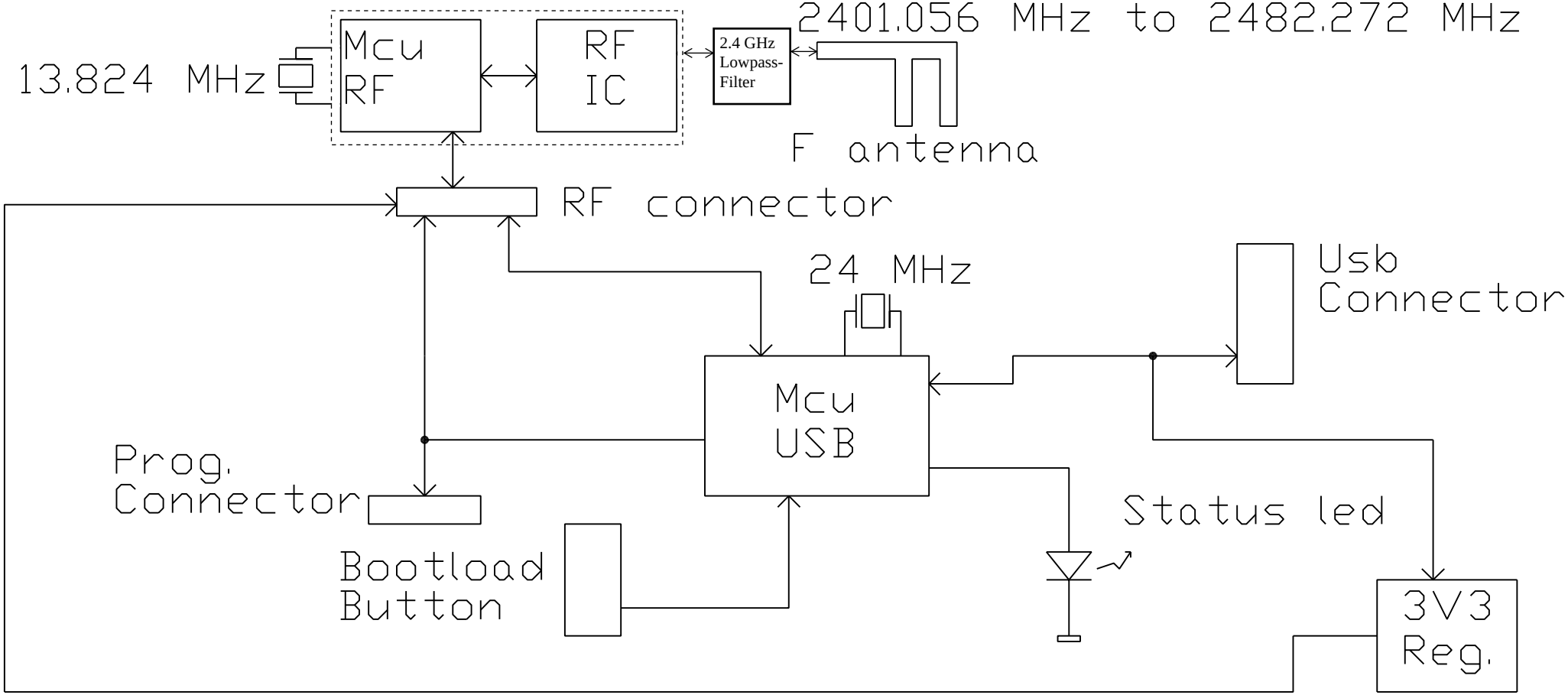

C2ME

Dongle block diagram

16/04/2007
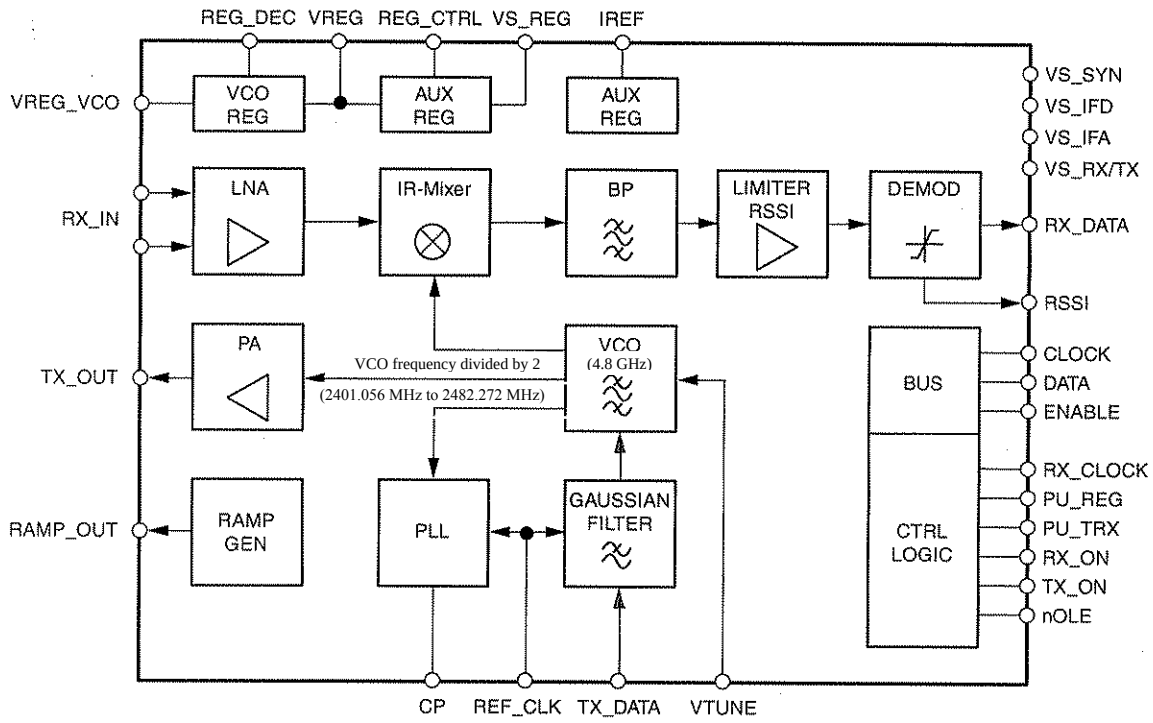
RF IC (ATR2406)