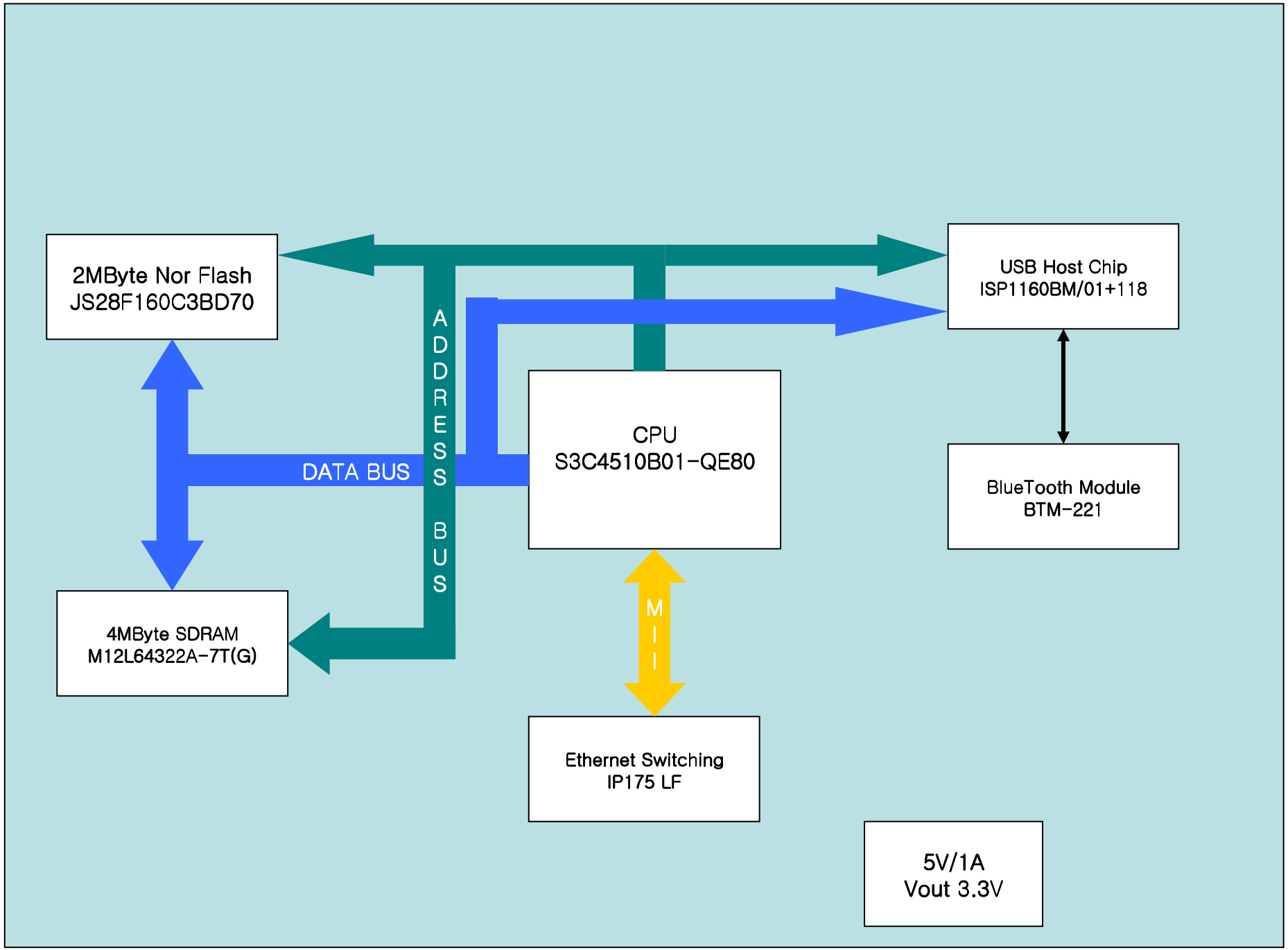
2MByte Nor Flash
JS28F160C3BD70
USB Host Chip
ISP1160BM/01+118
ADDRESS BUS
CPU
S3C4510B01-QE80
DATA BUS
BlueTooth Module
BTM-221
4MByte SDRAM
M12L64322A-7T(G)
MII
Ethernet Switching
IP175 LF
5V/1A
Vout 3.3V
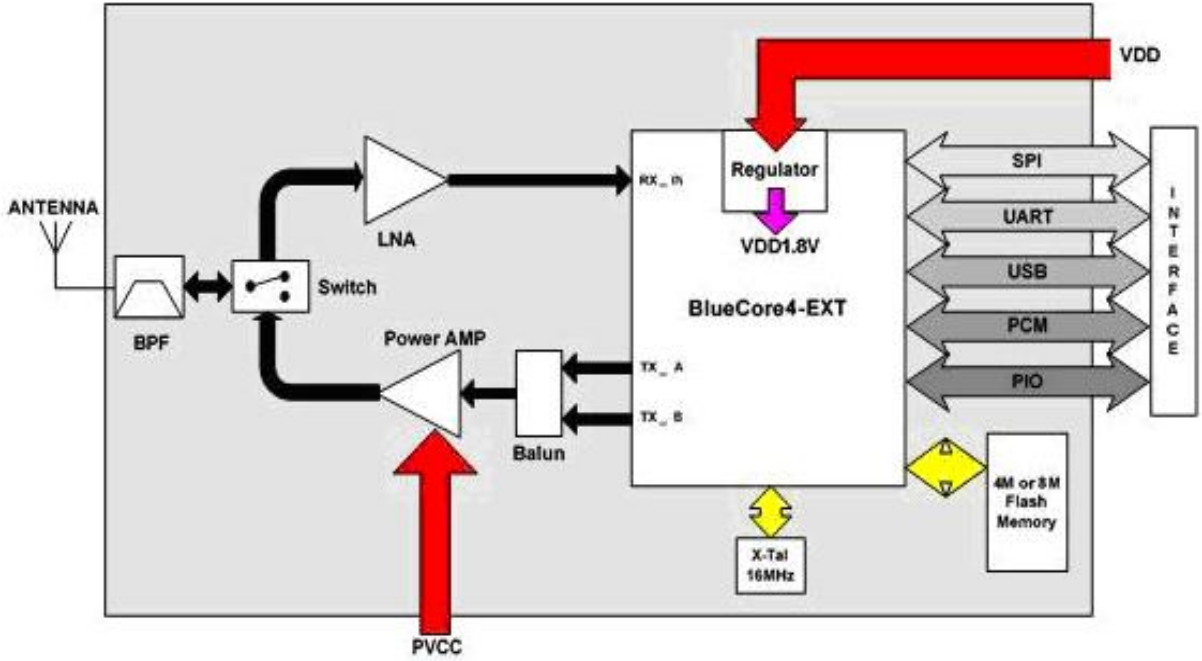
Block Diagram