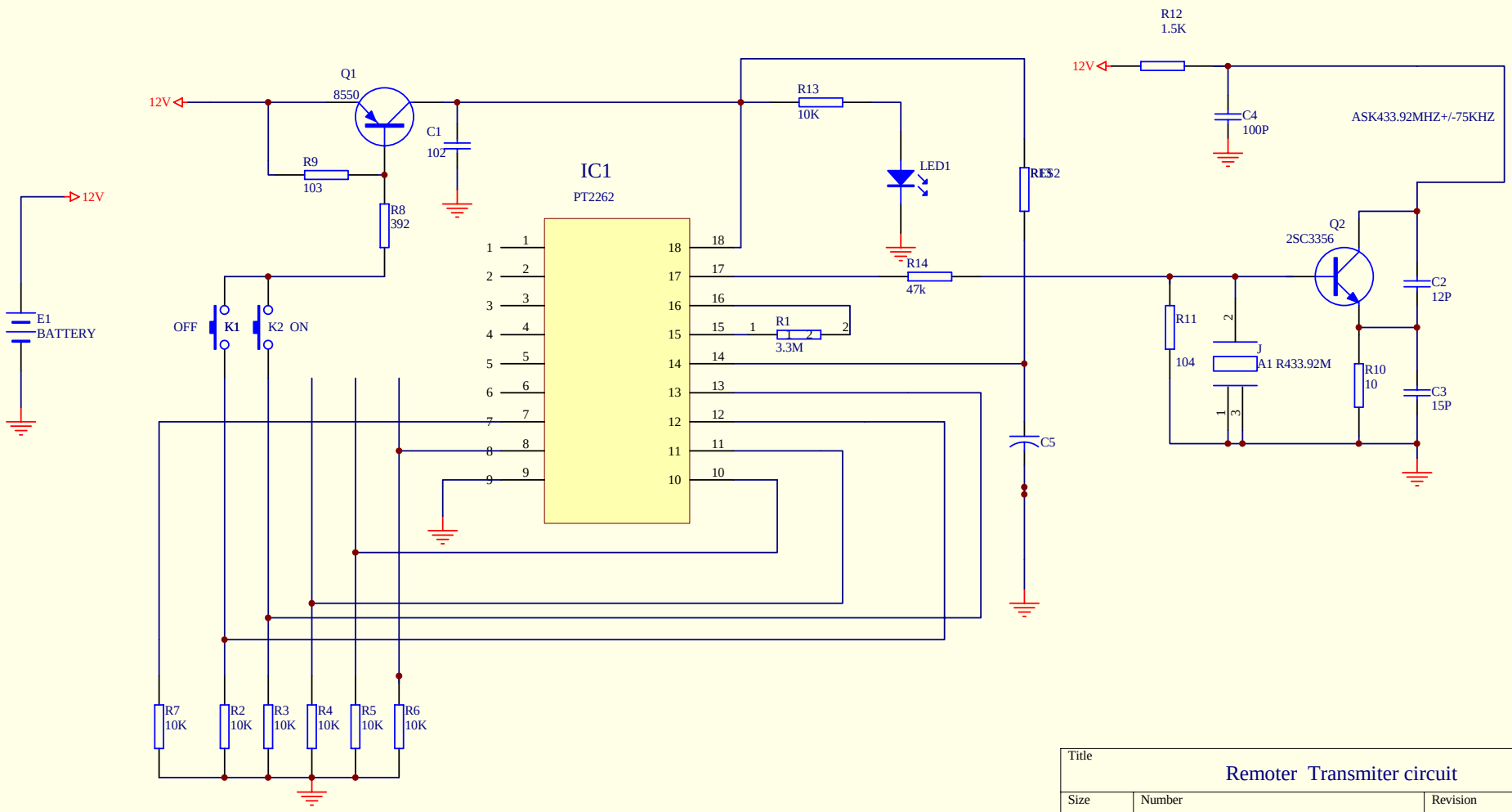


| Title | | |
|---|---|---|
| Remoter Transmiter circuit | | |
| Size A4 | Number | Revision |
| Date: 7-Aug-2006 | Sheet of | |
| File: D:\project\HUNTER\GAME CALL\schematic\Drawing1.sch | Drawn By: | |