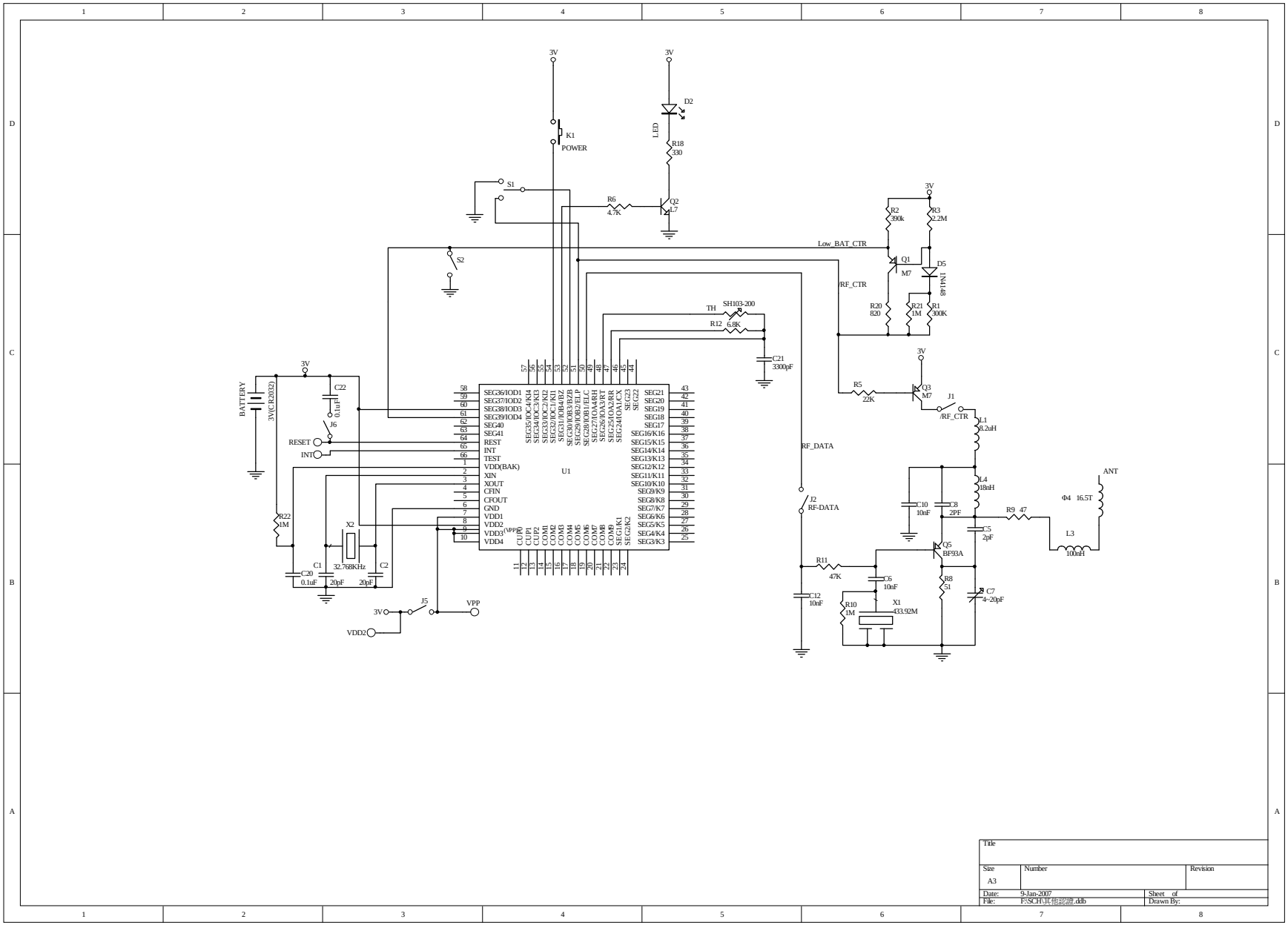

Title		
Size A3	Number	Revision
Date: 9-Jan-2007		Sheet of
File: F:\SCH\其他配件.ddb		Drawn By:

PDF created with pdfFactory Pro trial version www.pdffactory.com

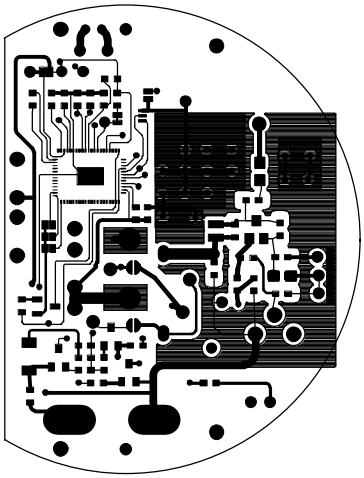

PDF created with pdfFactory Pro trial version www.pdffactory.com

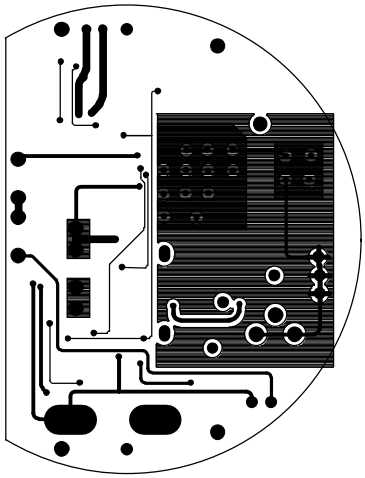

PDF created with pdfFactory Pro trial version www.pdffactory.com

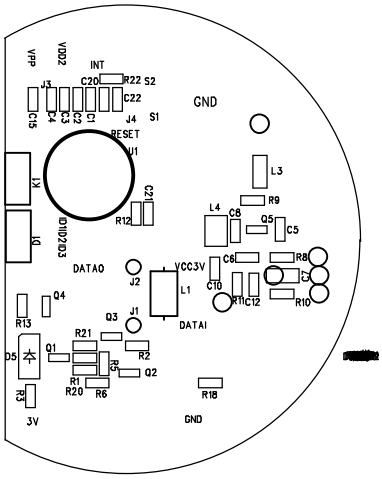

TOOLING NO.: PTTTMB
THICKNESS: 0.80MM

PDF created with pdfFactory Pro trial version www.pdffactory.com

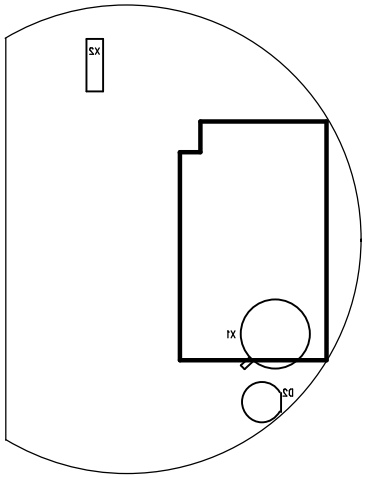

PDF created with pdfFactory Pro trial version www.pdffactory.com