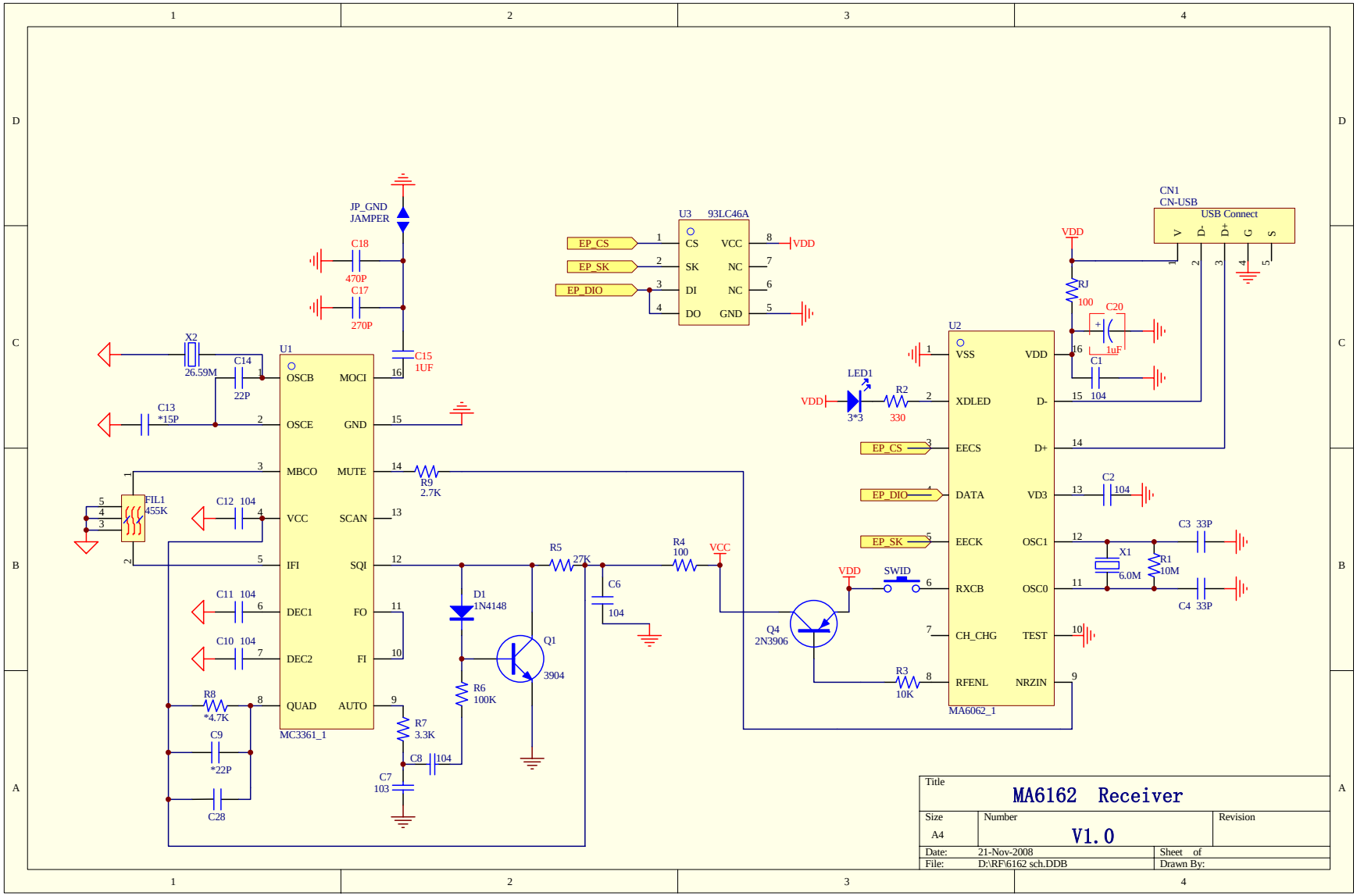
JP_GND
JAMPER
C18
470P
C17
270P
C15
1UF
X2
26.59M
C14
22P
C13
*15P
U1
OSCB
OSCE
MBCO
VCC
IFI
DEC1
DEC2
QUAD
MOCI
GND
MUTE
SCAN
SQI
FO
FI
AUTO
MC3361_1
FIL1
455K
C12 104
C11 104
C10 104
R8
*4.7K
C9
*22P
C28
R9
2.7K
R7
3.3K
C8 104
C7
103
D1
1N4148
R6
100K
Q1
3904
R5
27K
C6
104
R4
100
VCC
U3 93LC46A
EP_CS
EP_SK
EP_DIO
CS
SK
DI
DO
VCC
NC
NC
GND
VDD
CN1
CN-USB
USB Connect
V
D-
D+
G
S
RJ
100
C20
1uF
C1 104
LED1
3*3
R2
330
U2
VSS
XDLED
EECS
DATA
EECK
RXCB
CH_CHG
RFENL
VDD
D-
D+
VD3
OSC1
OSC0
TEST
NRZIN
MA6062_1
C2 104
C3 33P
C4 33P
X1
6.0M
R1
10M
SWID
Q4
2N3906
R3
10K
Title
MA6162 Receiver
Size
A4
Number
V1.0
Revision
Date: 21-Nov-2008
Sheet of
File: D:\RF\6162 sch.DDB
Drawn By: