HT1100 BLOCK DIAGRAM

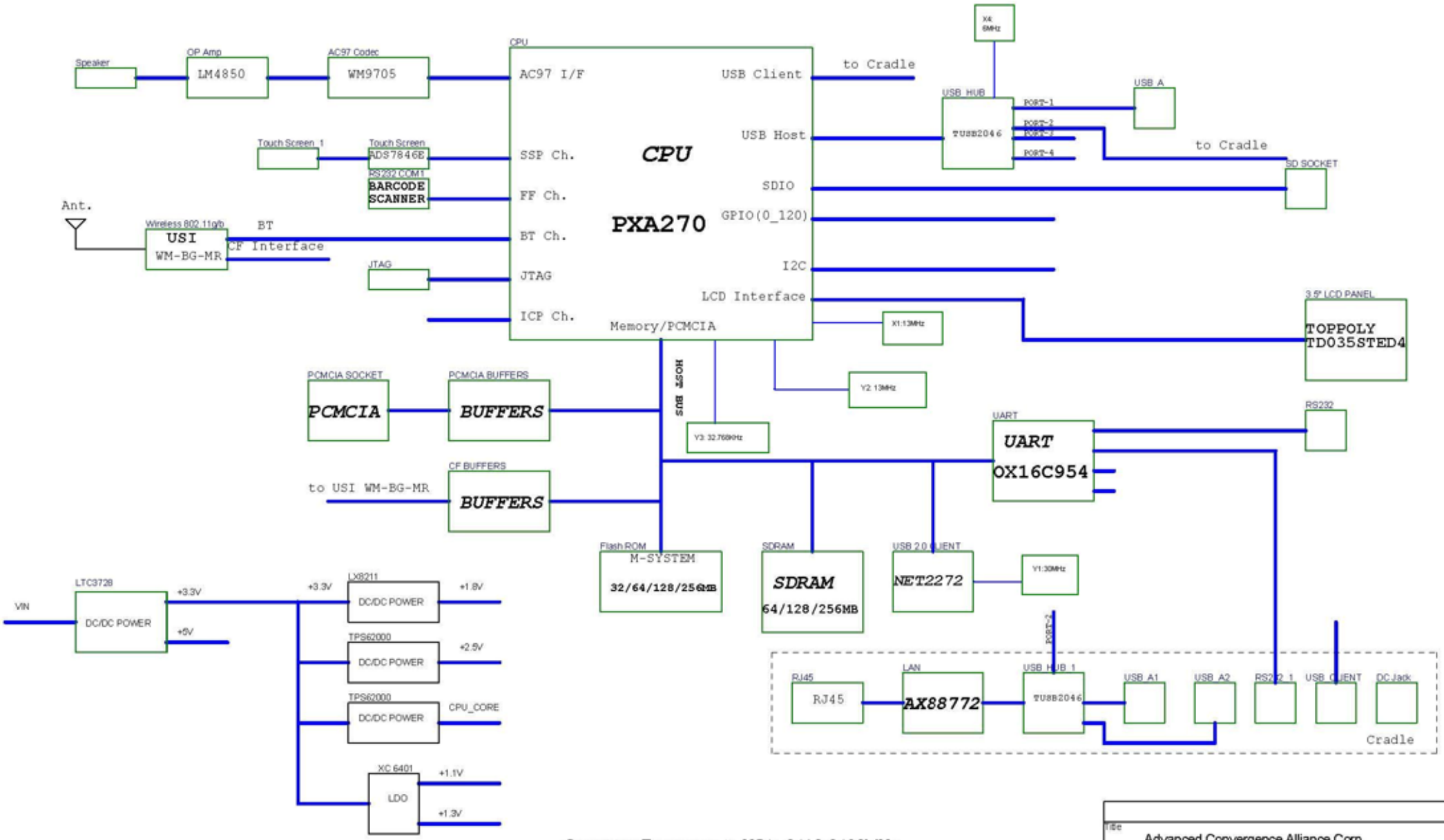

Operating Frequency in USA: 2412-2462MHz
Operating Frequency in Europe: 2412-2472MHz

Title	Advanced Convergence Alliance Corp.	
Size B	Document Number HT1100-X20	Rev R2.0
Date: Friday, October 13, 2006	Sheet 1 of 12	