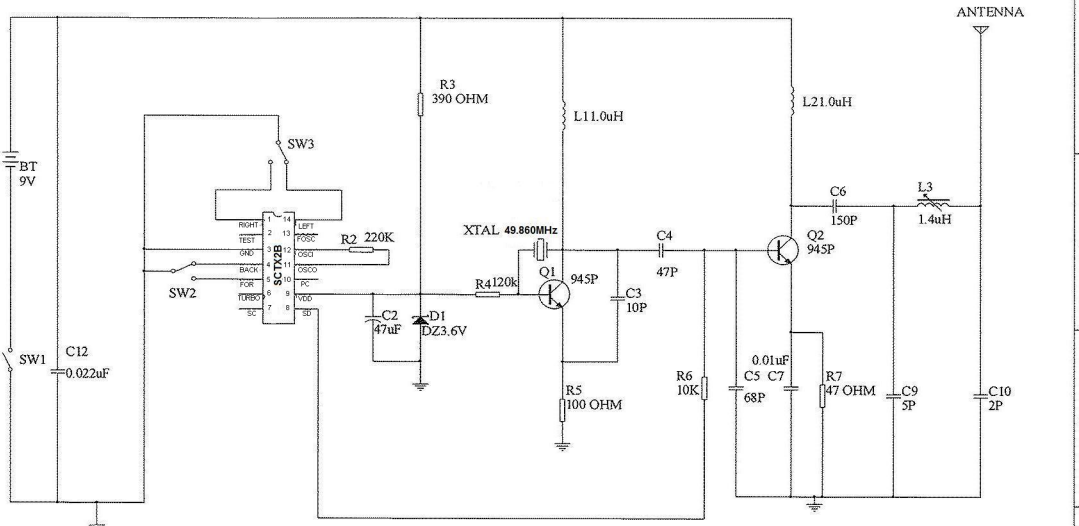

DRAWN:	DATE: 07/11/24	COMPANY:	
CHECK:		TITLE: 9508TX (49MHz)	REV: 0
APPROVED:			
RELEASED:		SCALE:	DWG NO.

Title: Model No.: 9507-29-1(TX)		
Size: B	Number	Revision
Date: 23-Nov-2007		Sheet of
File: D:\PDF2SCH\9507\9507-1.sch		Drawn By: