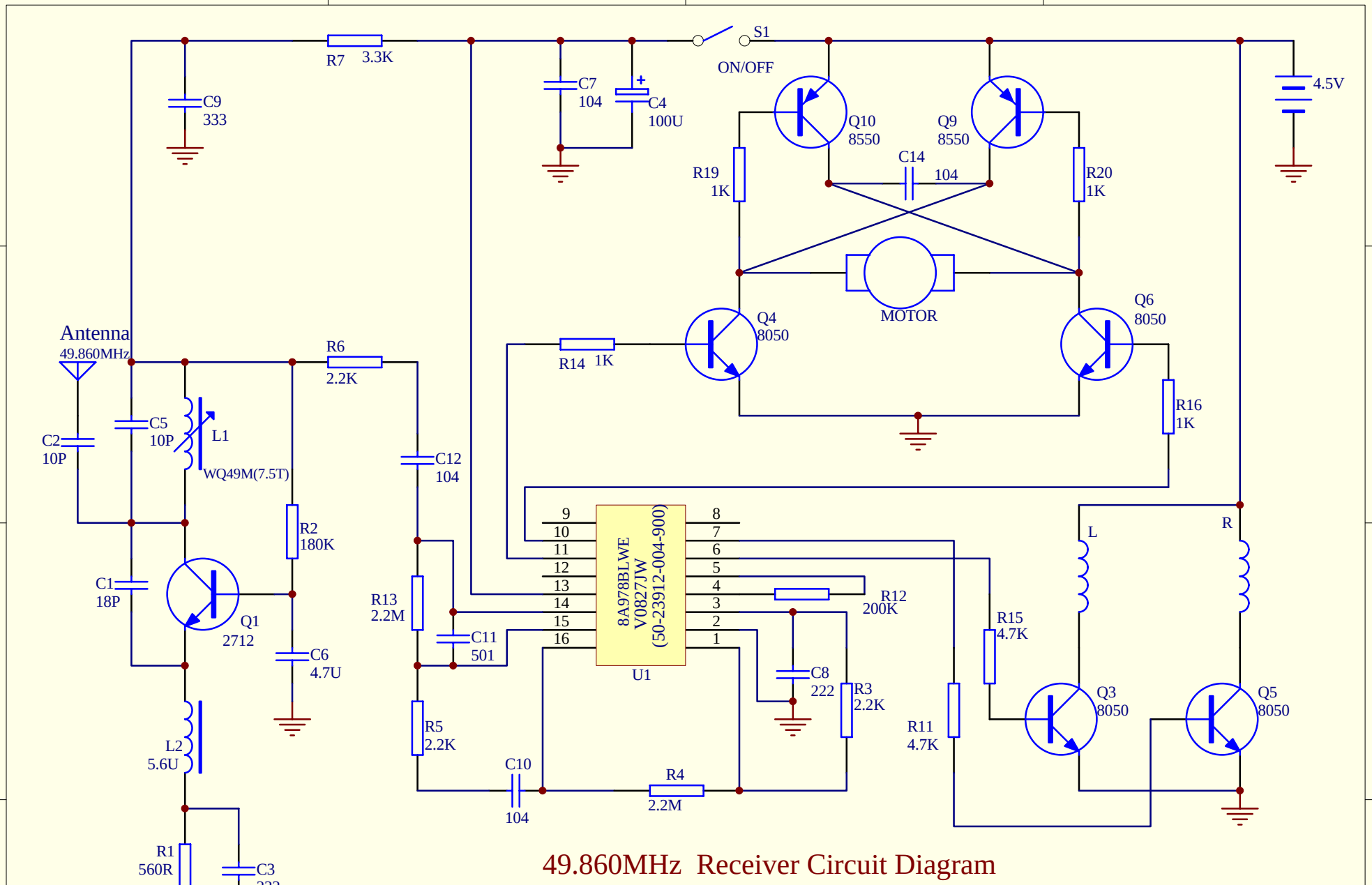

49.860MHz Receiver Circuit Diagram

Title	9358 49.860MHz	
Size B	Number	Revision
Date: 12-Nov-2008		Sheet of
File: E:\SCH\50-239~1.SCH		Drawn By: