BLOCK DIAGRAM
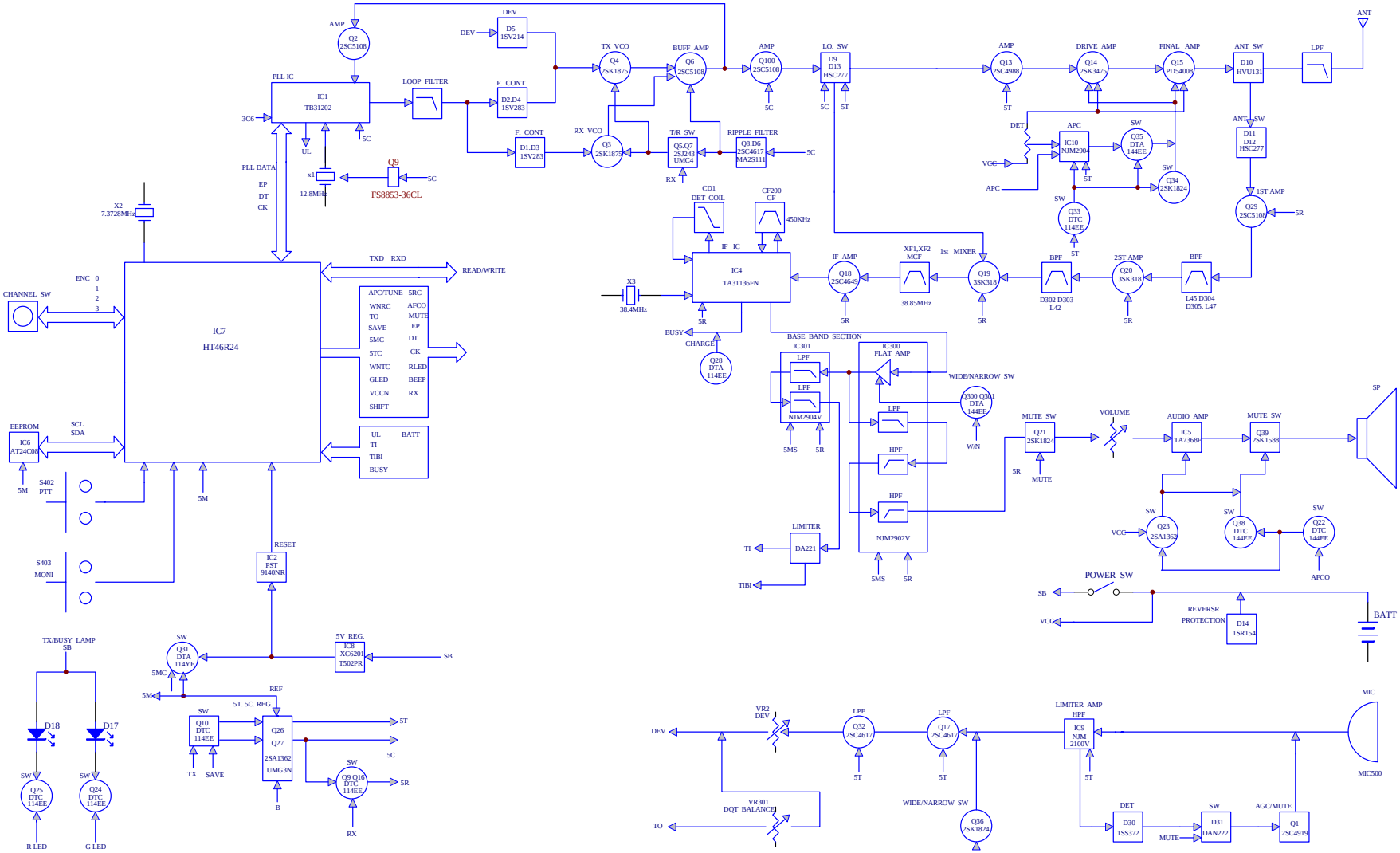
136-174MHz