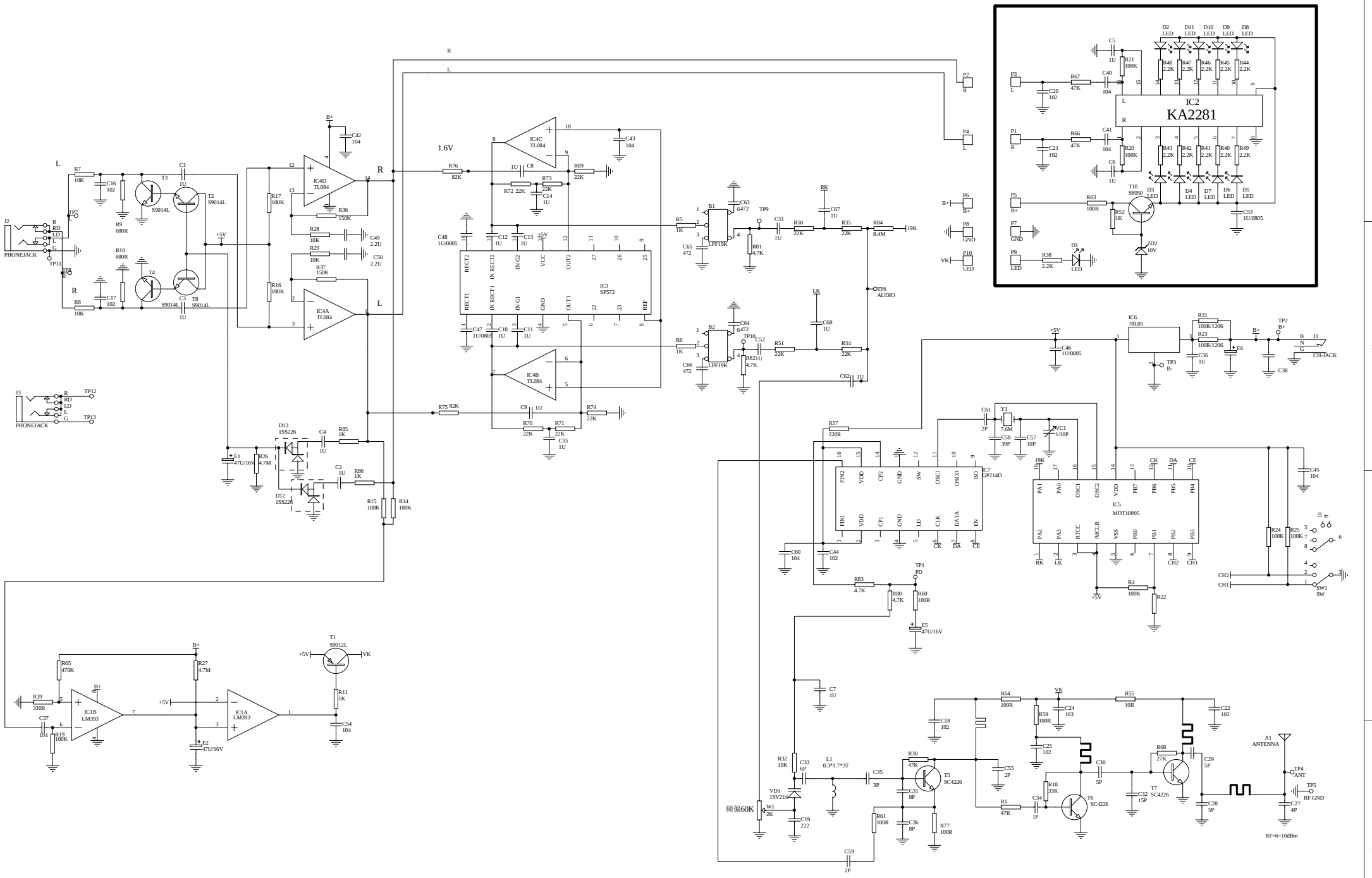

Title			
Size A2	Number TX914V22.SCH		Revision
Date: 13-Nov-2006		Sheet of	
File: E:\定型资料\定型产品电路资料\060628\GB0000\GZH863-915V22.ddb			