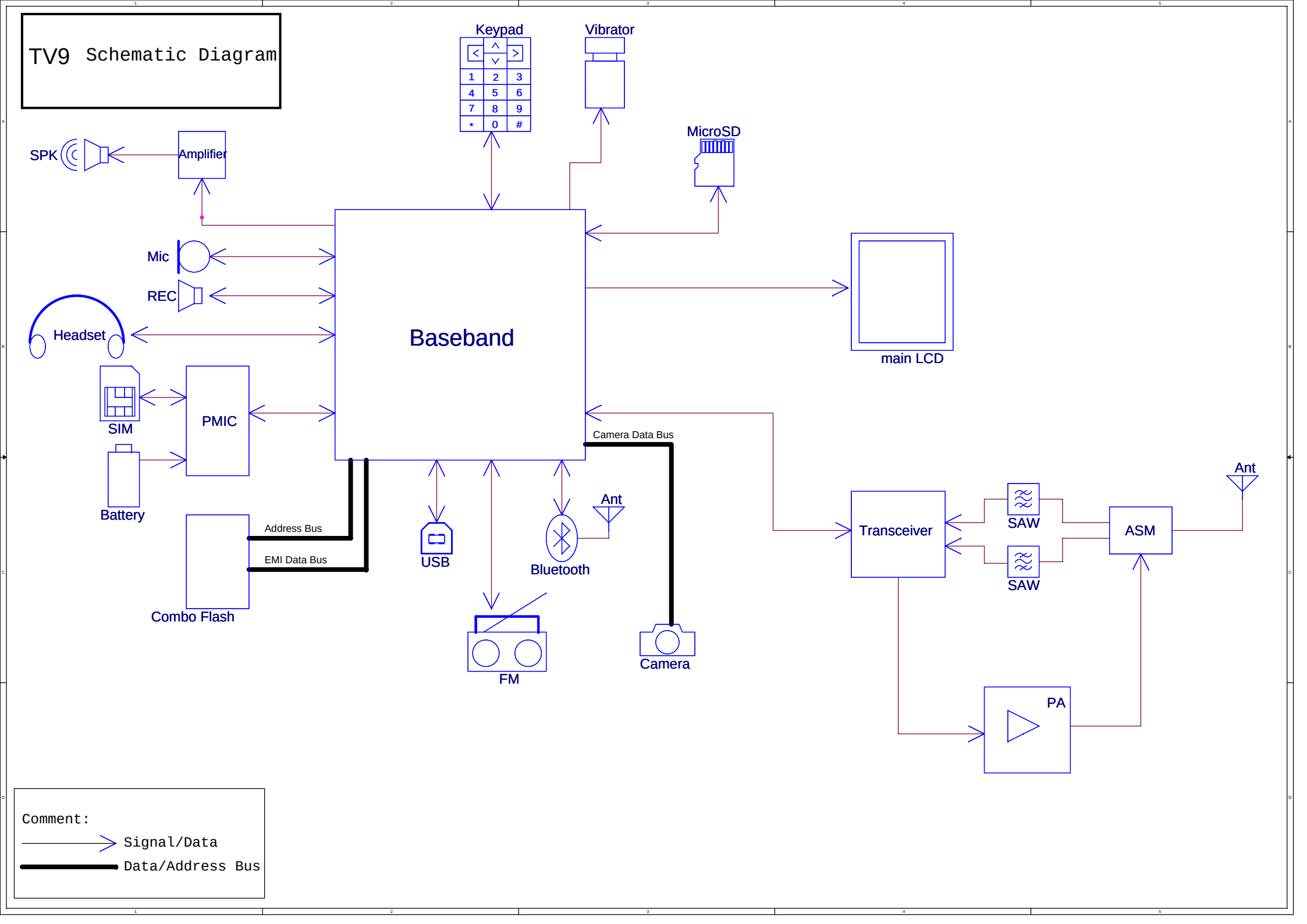
TV9 Schematic Diagram
Keypad
Vibrator
MicroSD
SPK
Amplifier
Mic
REC
Headset
Baseband
main LCD
SIM
PMIC
Battery
Camera Data Bus
Ant
Address Bus
EMI Data Bus
USB
Bluetooth
Transceiver
SAW
SAW
ASM
Ant
Combo Flash
FM
Camera
PA
Comment:
Signal/Data
Data/Address Bus