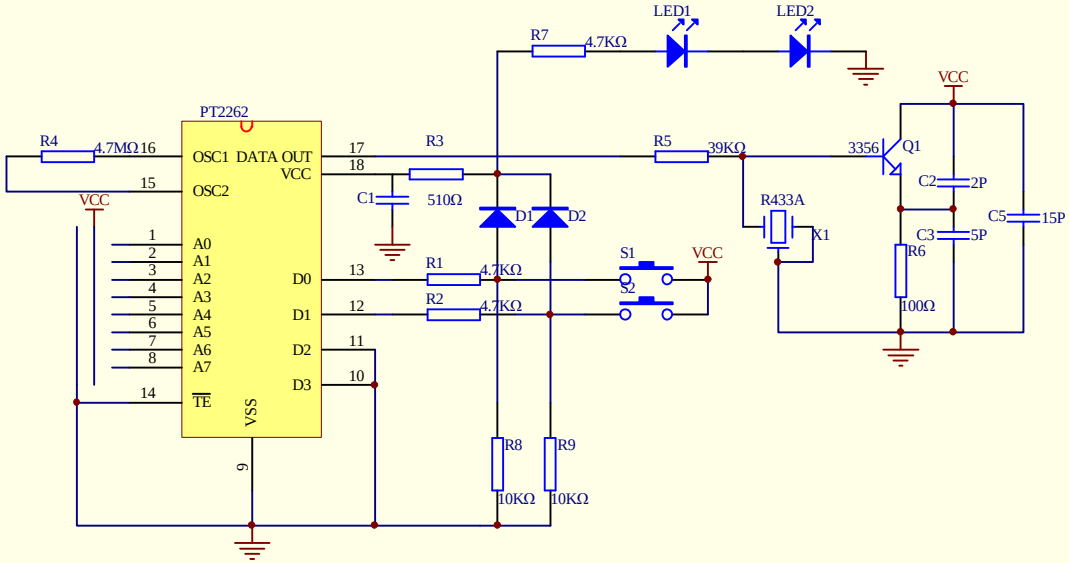


| Title | | |
|---|---|---|
| Size A4 | Number | Revision |
| Date: 18-Aug-2006 | | Sheet of |
| File: E:\user\PXD\MyDesign.ddb | | Drawn By: |