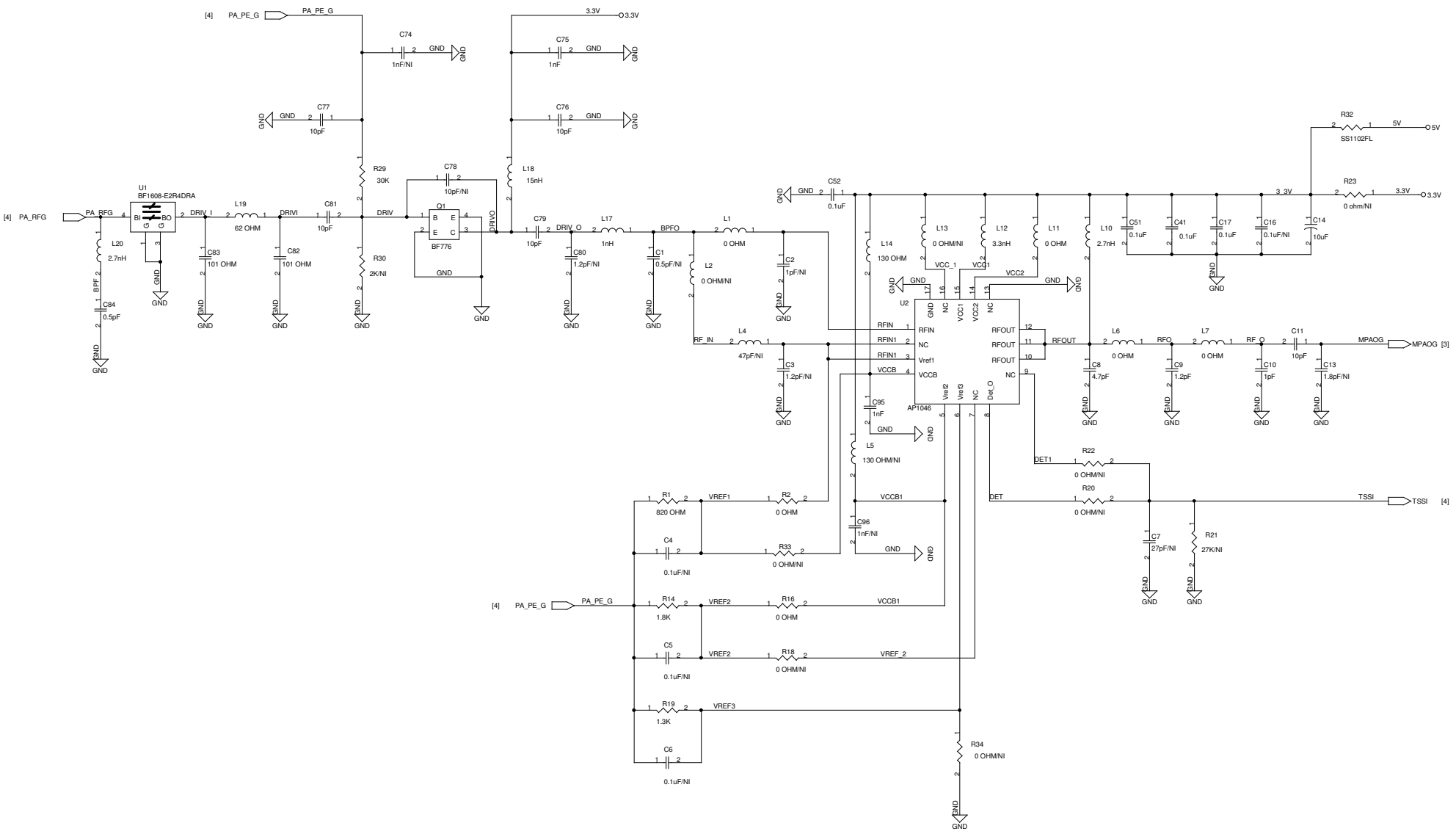

Ralink	RALINK TECHNOLOGY, CORP.		
	Title: 2.4GHz PA		
	Size: C	Document Number: 1-PA-AP1046.SCH	Rev: 1.0
	Date: Tuesday, March 10, 2009	Sheet 2 of 6	

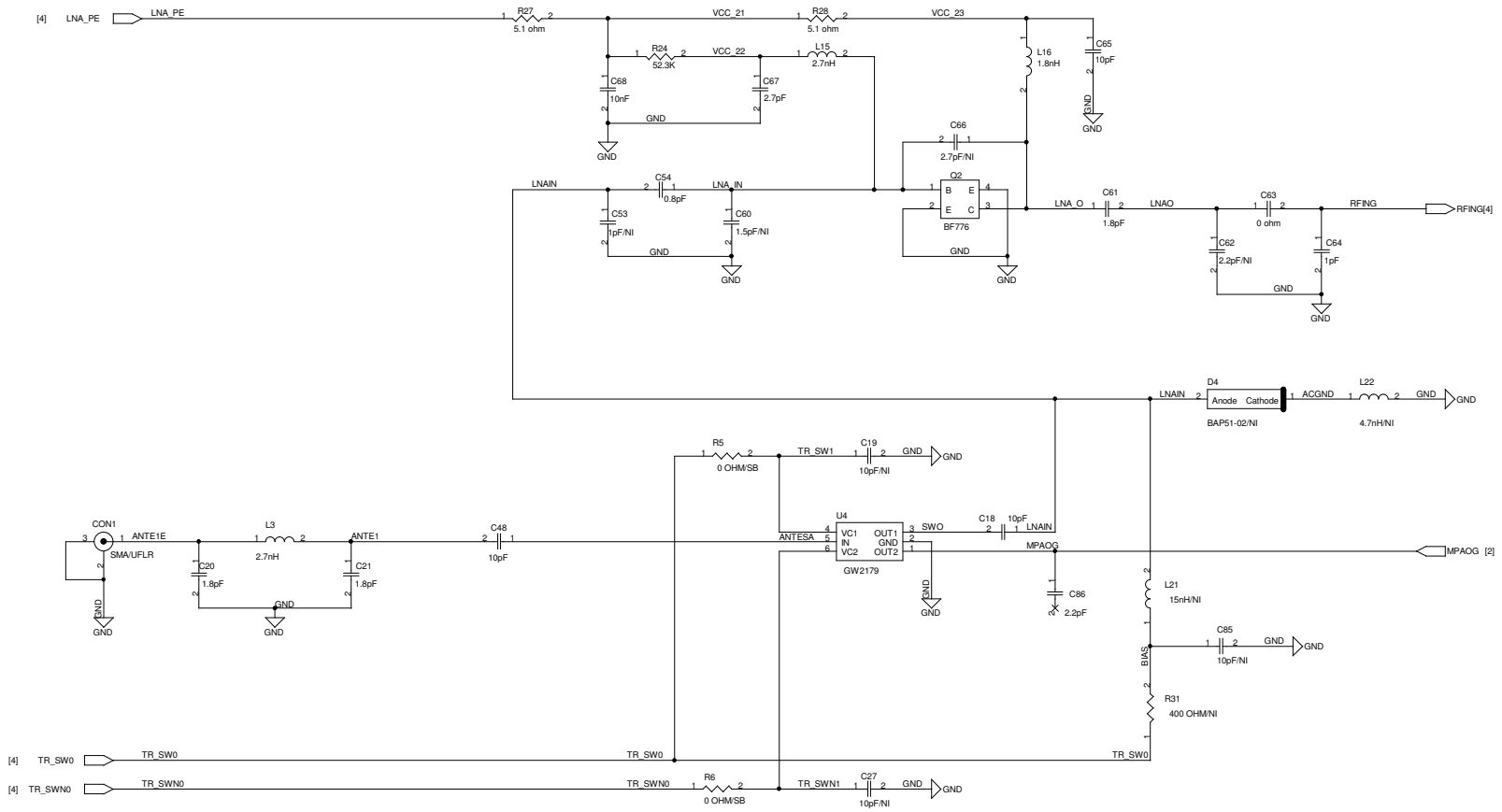

RALINK TECHNOLOGY, CORP.

Title: Front-End

Size: C | Document Number: 2-FrontEnd.SCH | Rev: 1.0

Date: Wednesday, April 01, 2009 | Sheet 3 of 6

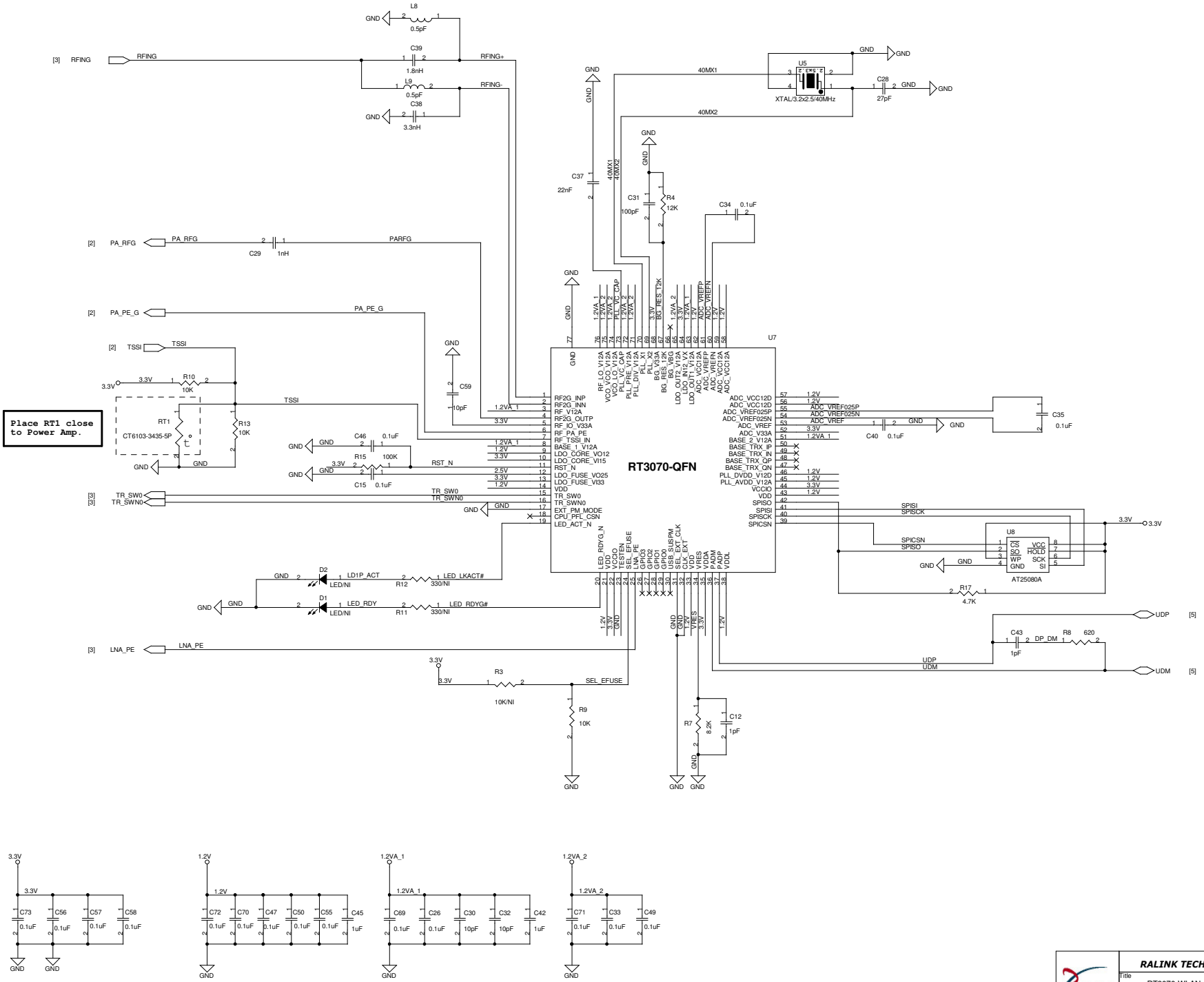

RALINK TECHNOLOGY, CORP.	
Title	RT3070-WLAN
Size C	Document Number 3-RT3070-WLAN.SCH
Rev	1.0
Date: Wednesday, April 01, 2009	Sheet 4 of 6

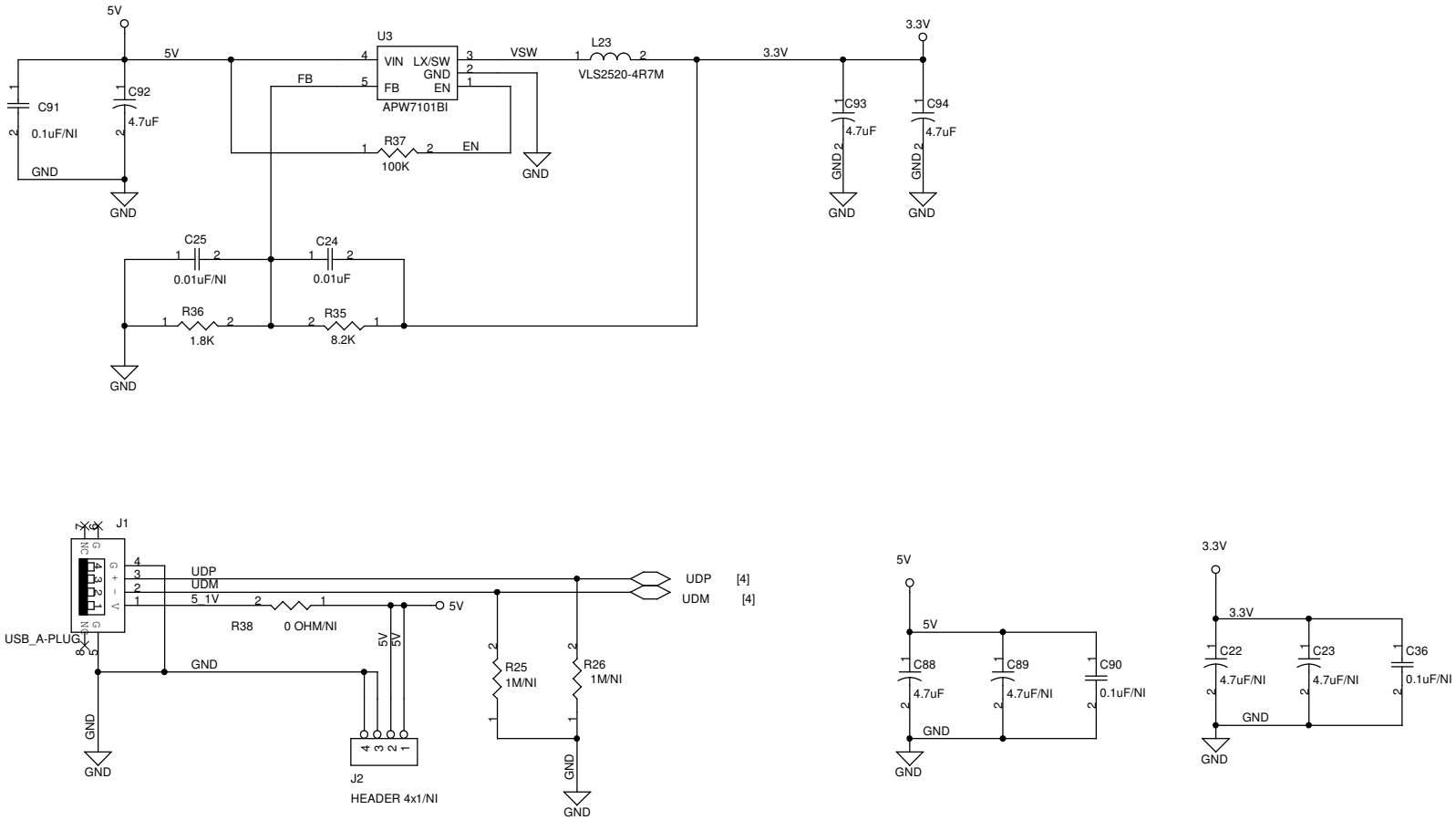

RALINK TECHNOLOGY, CORP.

Title	PEN USB Interface and Power
Size B	Document Number 4-USB-A.SCH
Rev	1.0
Date:	Tuesday, March 10, 2009
Sheet	5 of 6