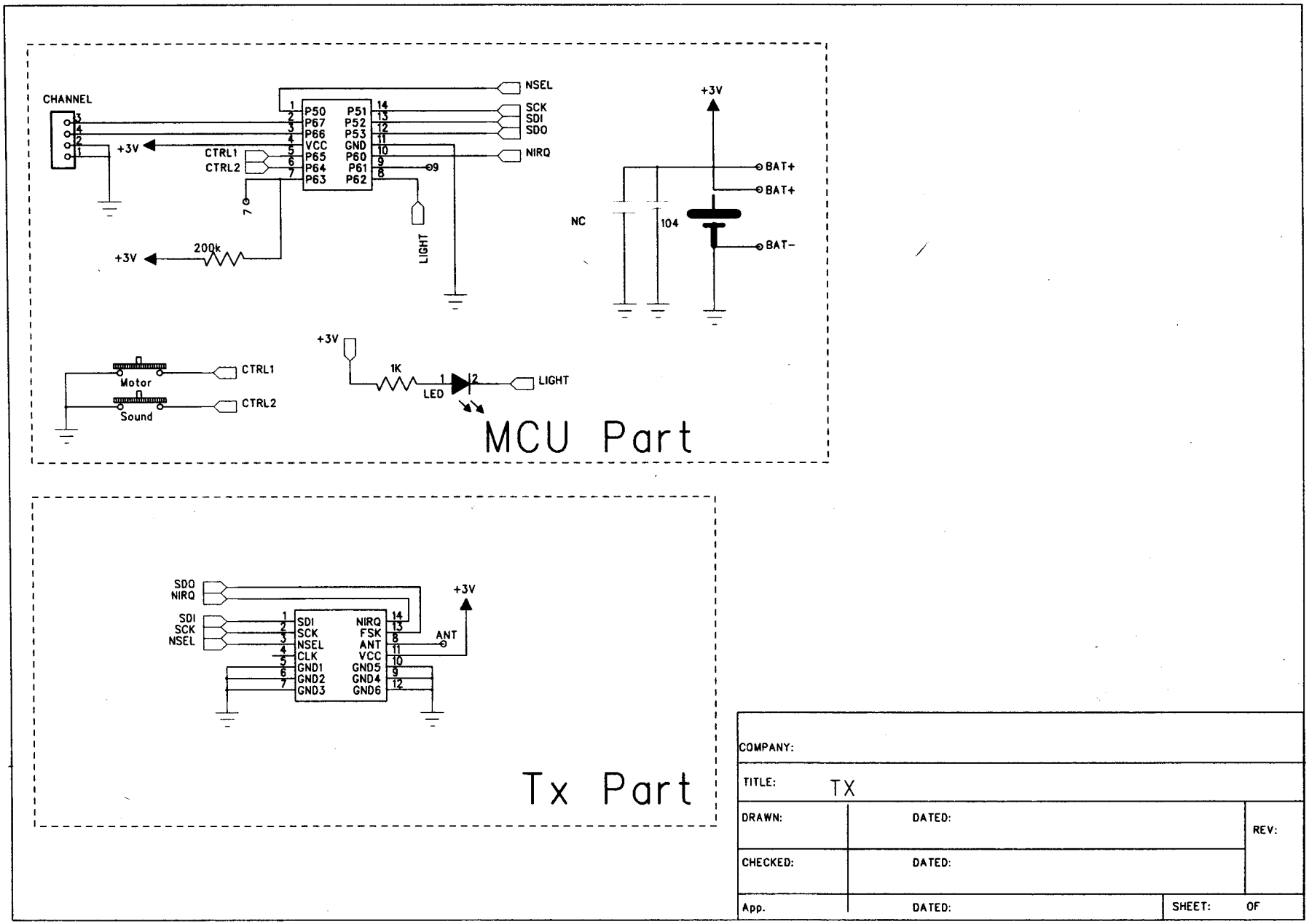
CHANNEL
+3V
CTRL1
CTRL2
P50
P67
P66
VCC
P65
P64
P63
P51
P52
P53
GND
P60
P61
P62
NSEL
SCK
SDI
SDO
NIRQ
LIGHT
200k
NC
104
BAT+
BAT+
BAT-
Motor
Sound
1K
LED
MCU Part
SDO
NIRQ
SDI
SCK
NSEL
CLK
GND1
GND2
GND3
FSK
ANT
VCC
GND5
GND4
GND6
Tx Part
COMPANY:
TITLE: TX
DRAWN:
DATED:
REV:
CHECKED:
App.
SHEET:
OF

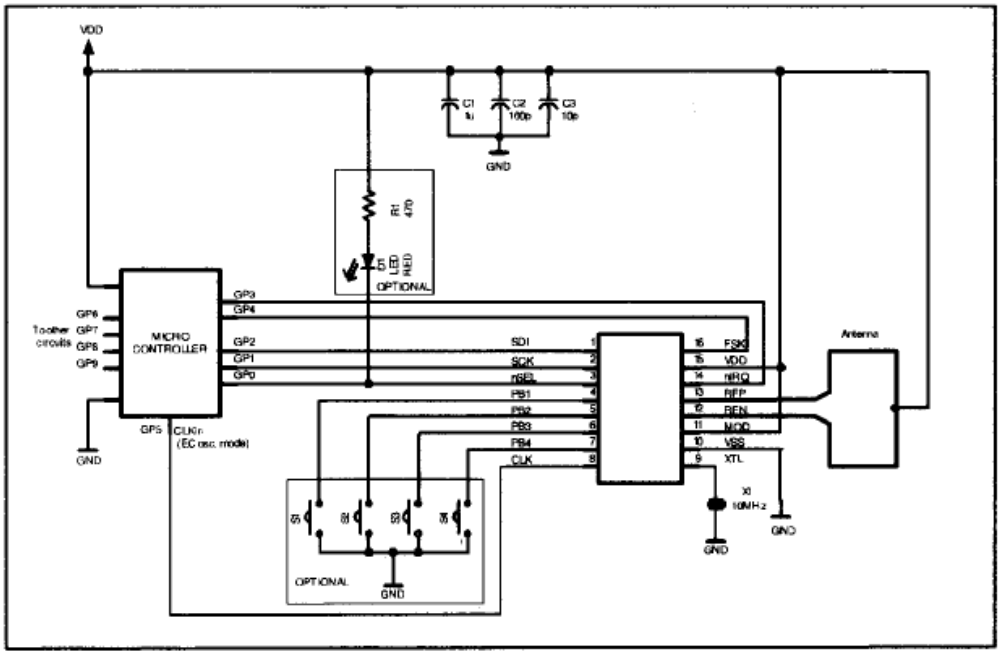
VDD
C1
C2
100p
C3
10p
GND
R1
470
D1
LED
(RED)
OPTIONAL
MICRO
CONTROLLER
GP6
GP7
GP8
GP9
Toother
circuits
GP3
GP4
GP2
GP1
GP0
GP5
CLKI:
(EC osc. mode)
GND
SDI
SCK
nSEL
PB1
PB2
PB3
PB4
CLK
FSK
VDD
nHQ
RFP
BEN
MOD
VSS
XTL
Antenna
X1
10MHz
GND
GND
S5
S4
S3
S2
OPTIONAL
GND