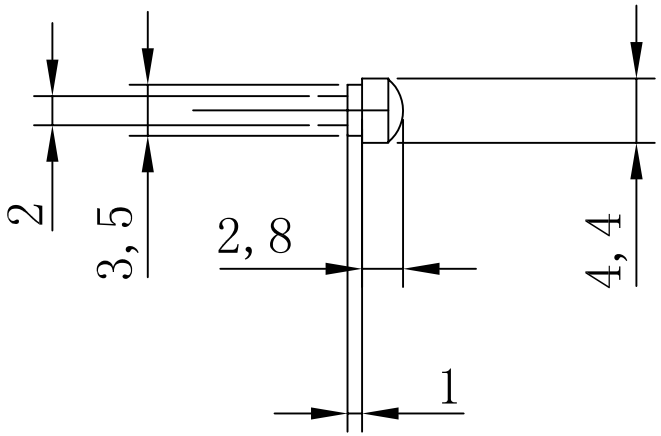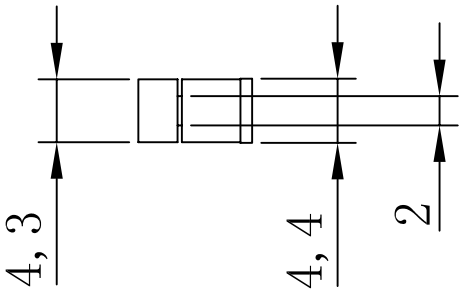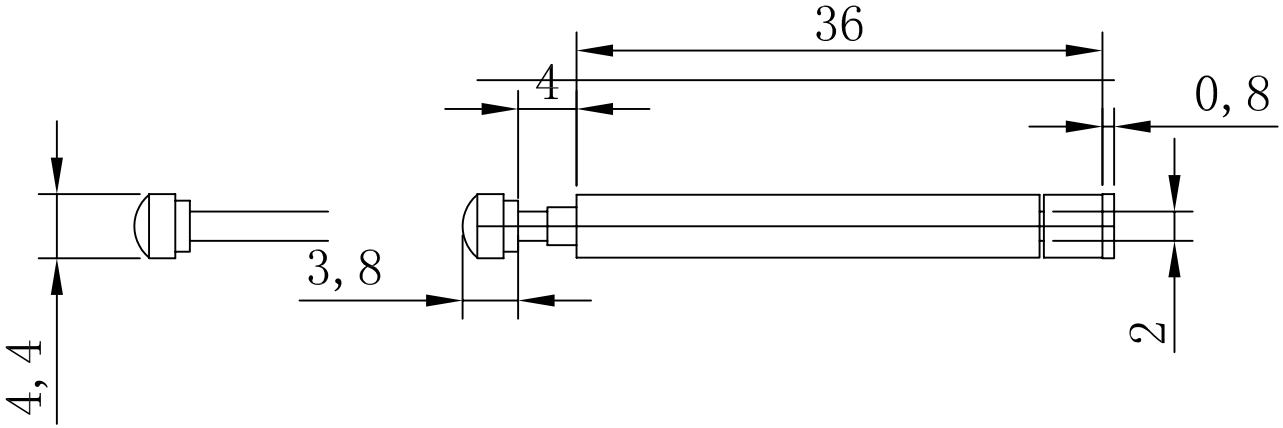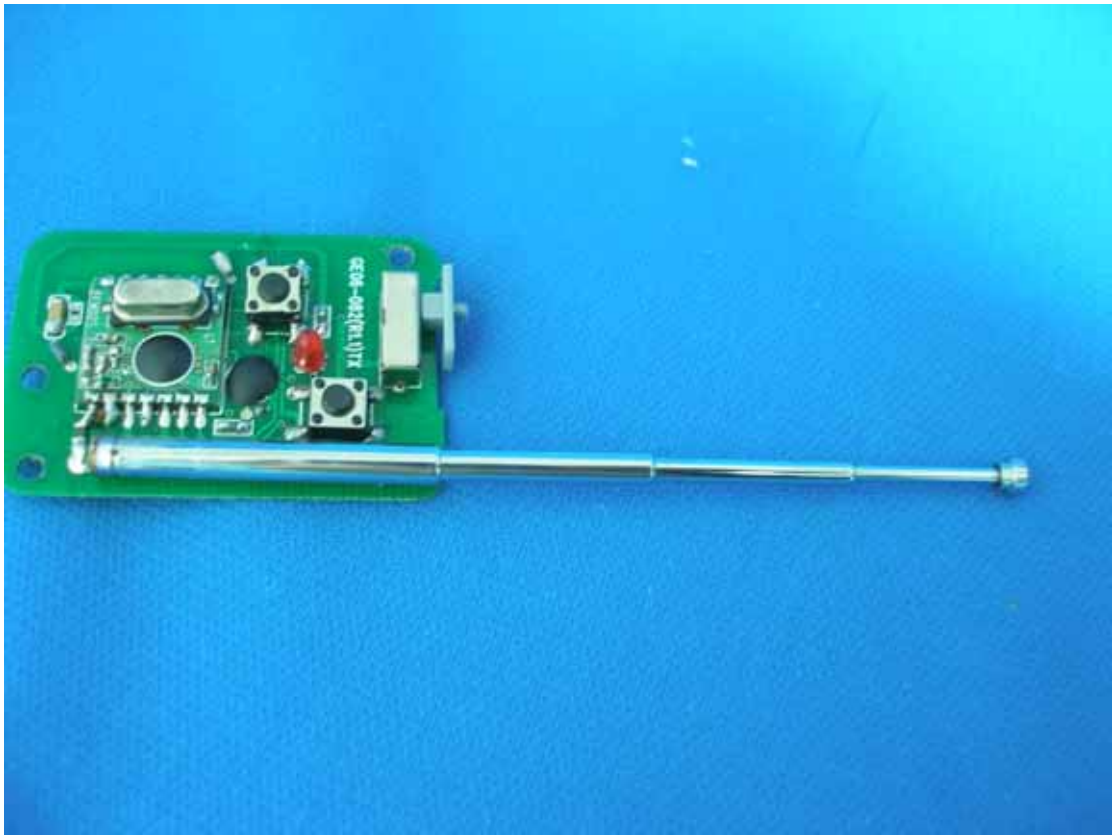Antenna specification	model	4.4-36	Drawing No	1044