| REVISIONS | | | | |
|---|---|---|---|---|
| ZONE | REV. | DESCRIPTION | DATE | APPROVED |
| | X1 | INITIAL RELEASE | 28/09/2006 | K LEESON |
| | X2 | 1. REMOVED TEXT FROM BOTTOM OF LABEL | 01/11/2006 | K LEESON |

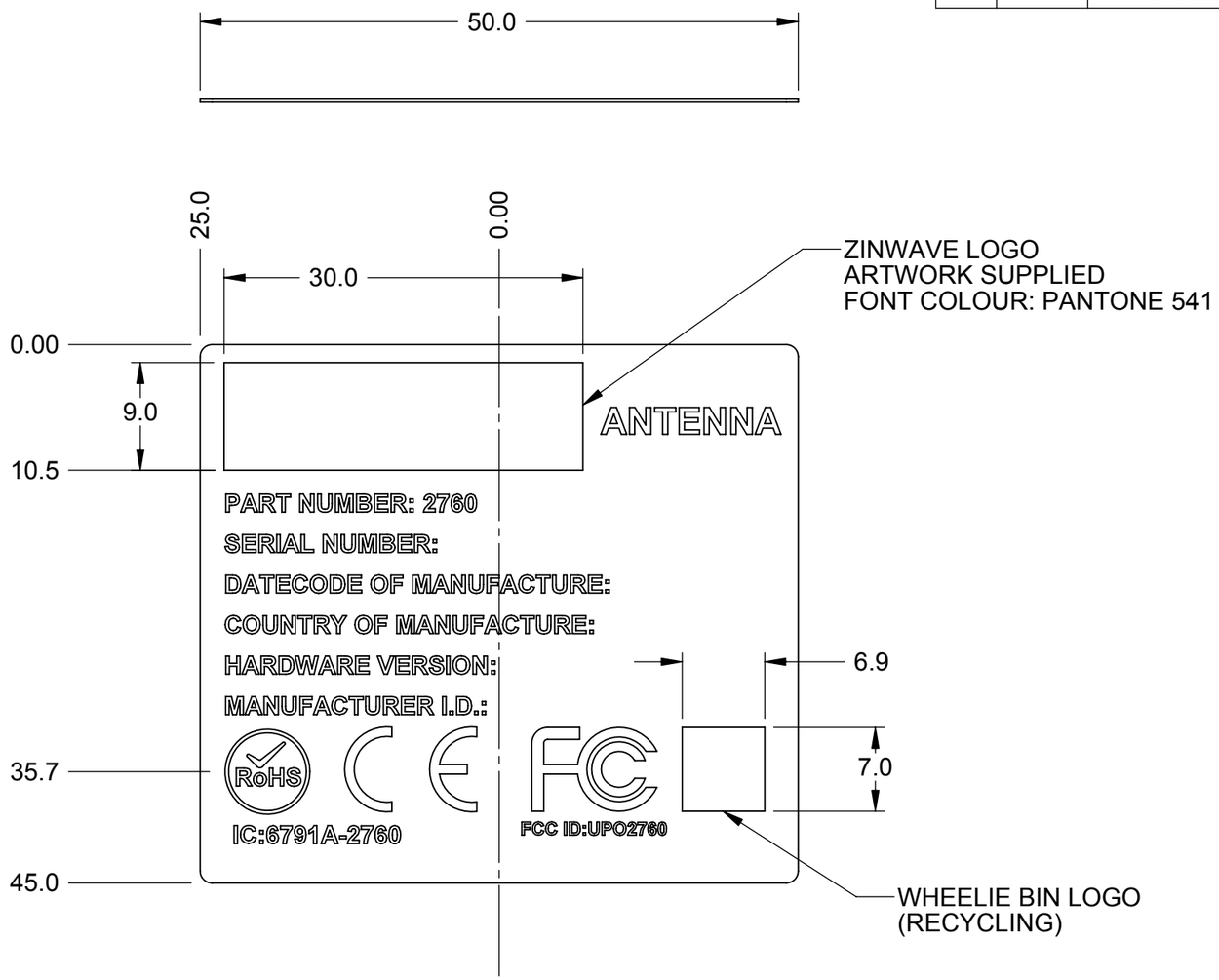


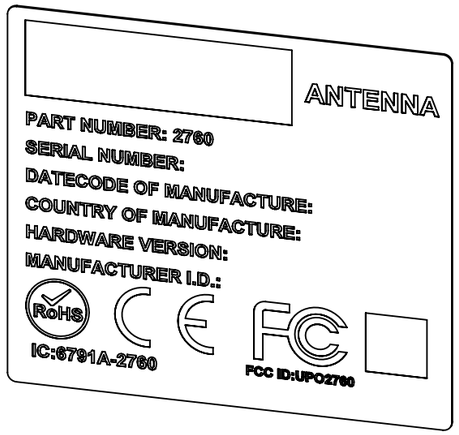


1. BACKGROUND COLOUR: TO BE SOLID WHITE.
2. FONT COLOUR: PANTONE 541.
3. FONT SIZE: SEE DRAWING.

NOTES:

| | | | |
|---|---|---|---|
| TOLERANCES UNLESS OTHERWISE SPECIFIED<br>X.X ± 0.20<br>X.XX ± 0.10<br>X.XXX ± 0.05<br>ANGLES: ± 0.5° | MATERIAL: | FINISH: | ZinWave HARSTON MILL HARSTON, CAMBRIDGE CB2 5GG |
| | WEIGHT: 0.66 | UNLESS OTHERWISE SPECIFIED: DIMENSIONS ARE IN MILLIMETERS THIRD ANGLE PROJECTION | |
| DESIGNER / ENGINEER: K LEESON | DATE 28 SEP 06 | FILE LOCATION | TITLE: ANTENNA / LABEL, BOTTOM |
| CHECKED BY: K LEESON | 28 SEP 06 | | |
| ENGINEERING APRV'D BY: K LEESON | 01 NOV 06 | REVISION: X2 | DWG NO. ZP301211-X2 — SIZE A3 |
| MANUFACTURING APRV'D BY: | | SCALE: 2:1 | DO NOT SCALE DRAWING — SHEET 1 OF 1 |