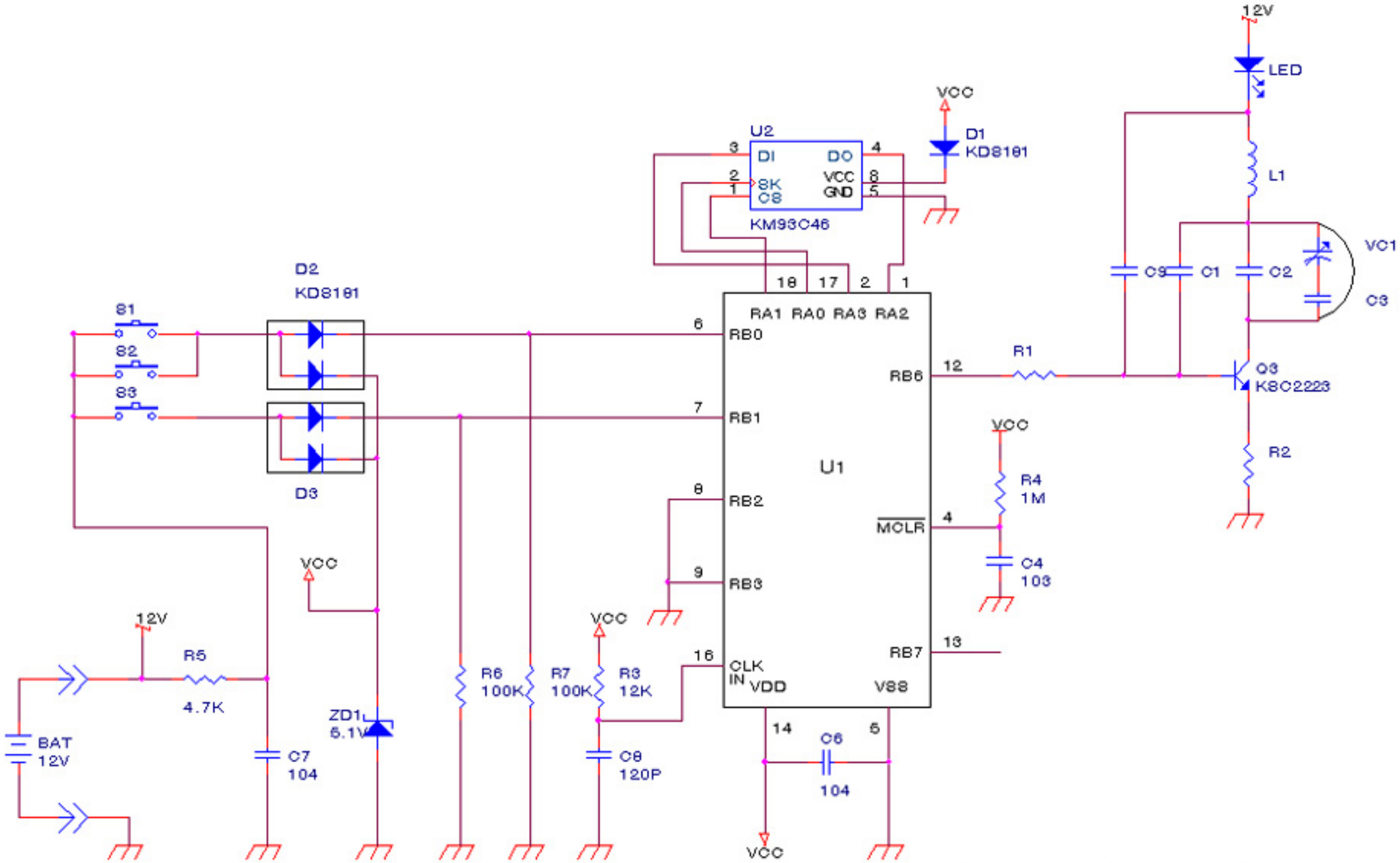

결재	DRW.	CKD.	APR.	MODEL	EWPP-202
	배찬영			TITLE	WIRELESS PUSH BUTTON
				DRW.NO.	KJ-QS-F143
작성	2006.06.02			변경	
K&J ELECTRONICS,INC.				FILE NAME	EWPP-202C-FCC