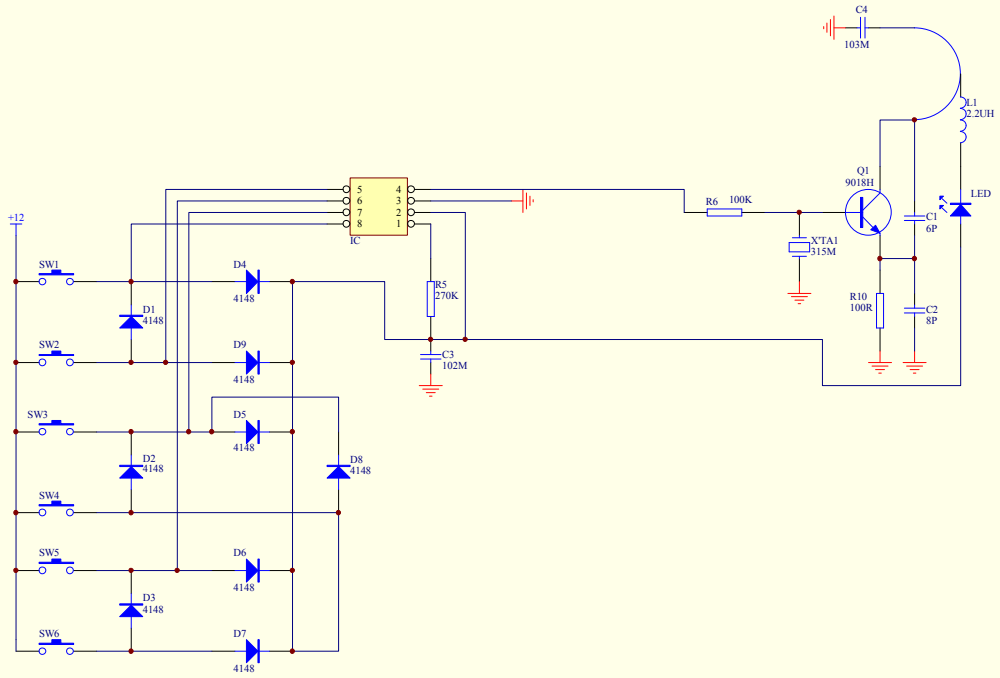

Title	RF1112-TX Schematic	
Size B	Number	Revision
Date: 11-Sep-2006		Sheet of
File: F:\亚历\亚历\亚历.DDB		Drawn By:

PDF 文件以 "FinePrint pdfFactory Pro" 试用版创建 http://www.pdffactory.com