Applicant : Silverorchard Technology Co., Ltd
FCC ID: UM5SO-2096W
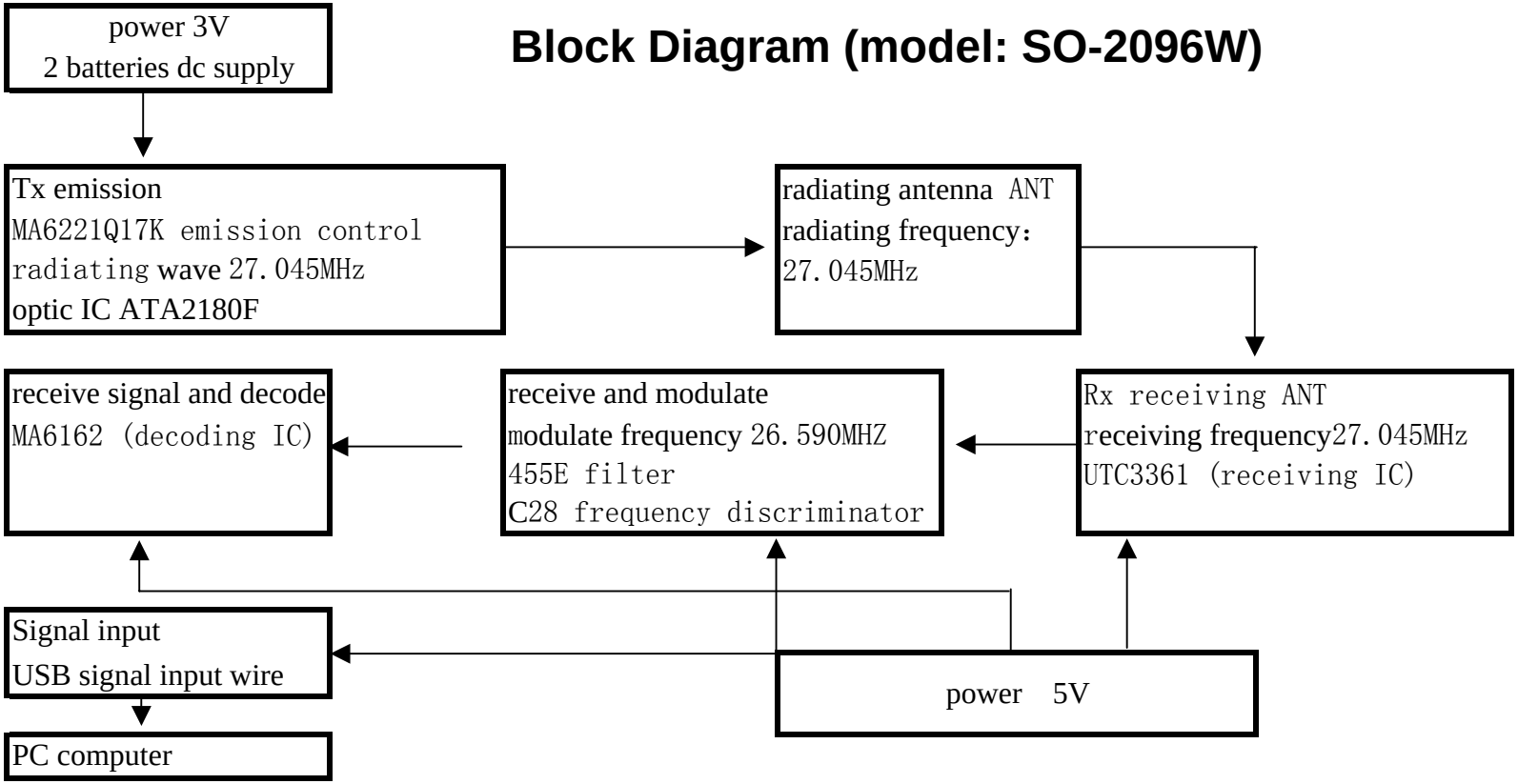
Block Diagram (model: SO-2096W)