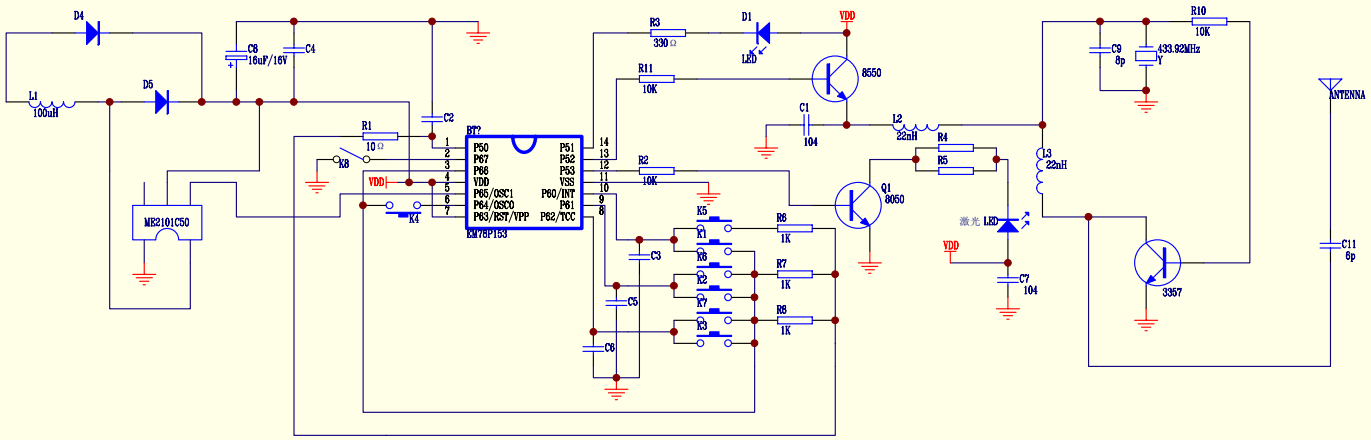

Title		
Size B	Number	Revision
Date: 23-Sep-2006	Sheet of	
File: D:\我的文档\业务客户\大鑫\fcc id\DATA\	Drawn By:	\电子线路图\WT-TX3093电子线路图.DDB