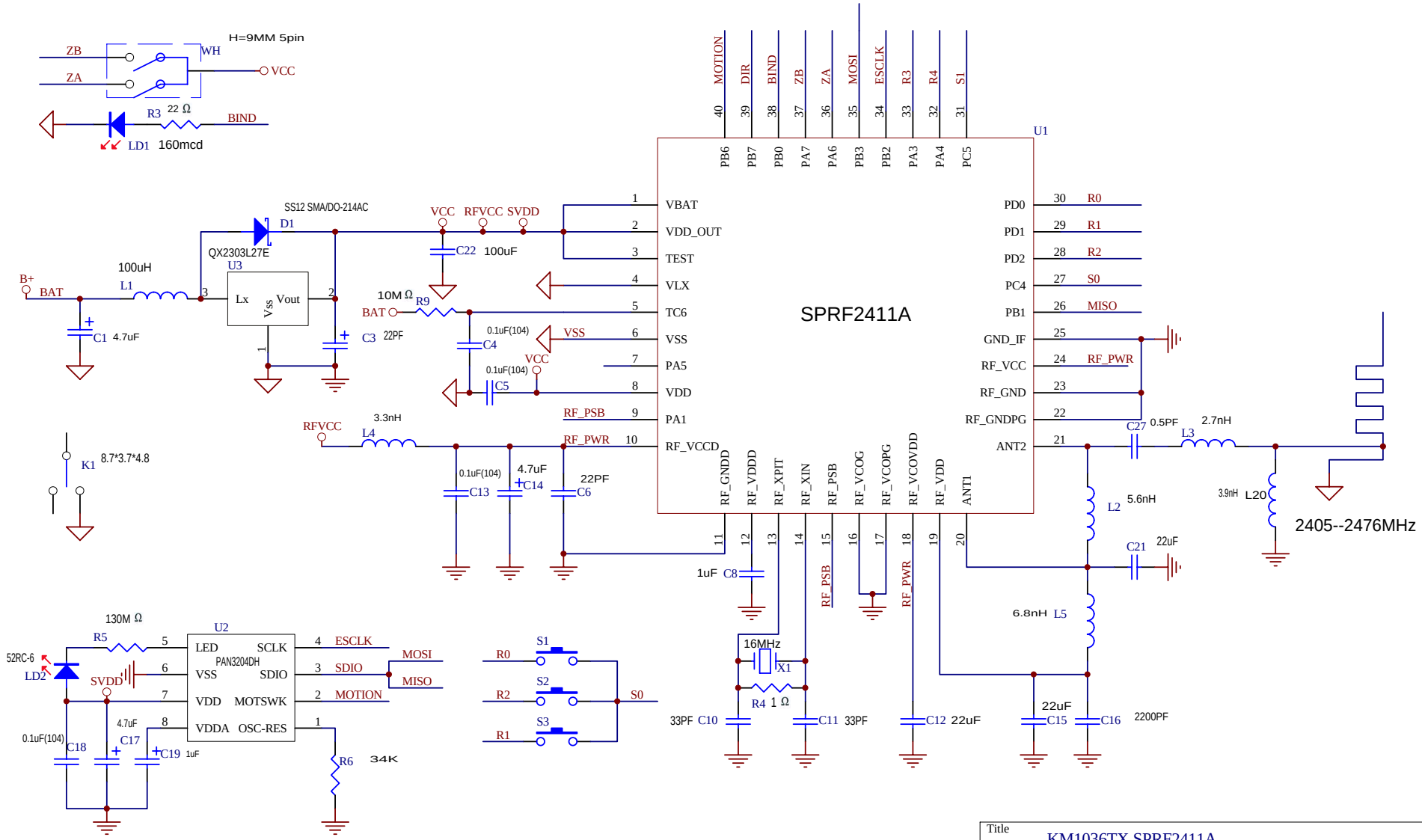

Title	KM1036TX SPRF2411A	
Size A4	Number *2.4G RF SoC TX*	Revision VER:1.0
Date: 18-May-2010	Sheet of	