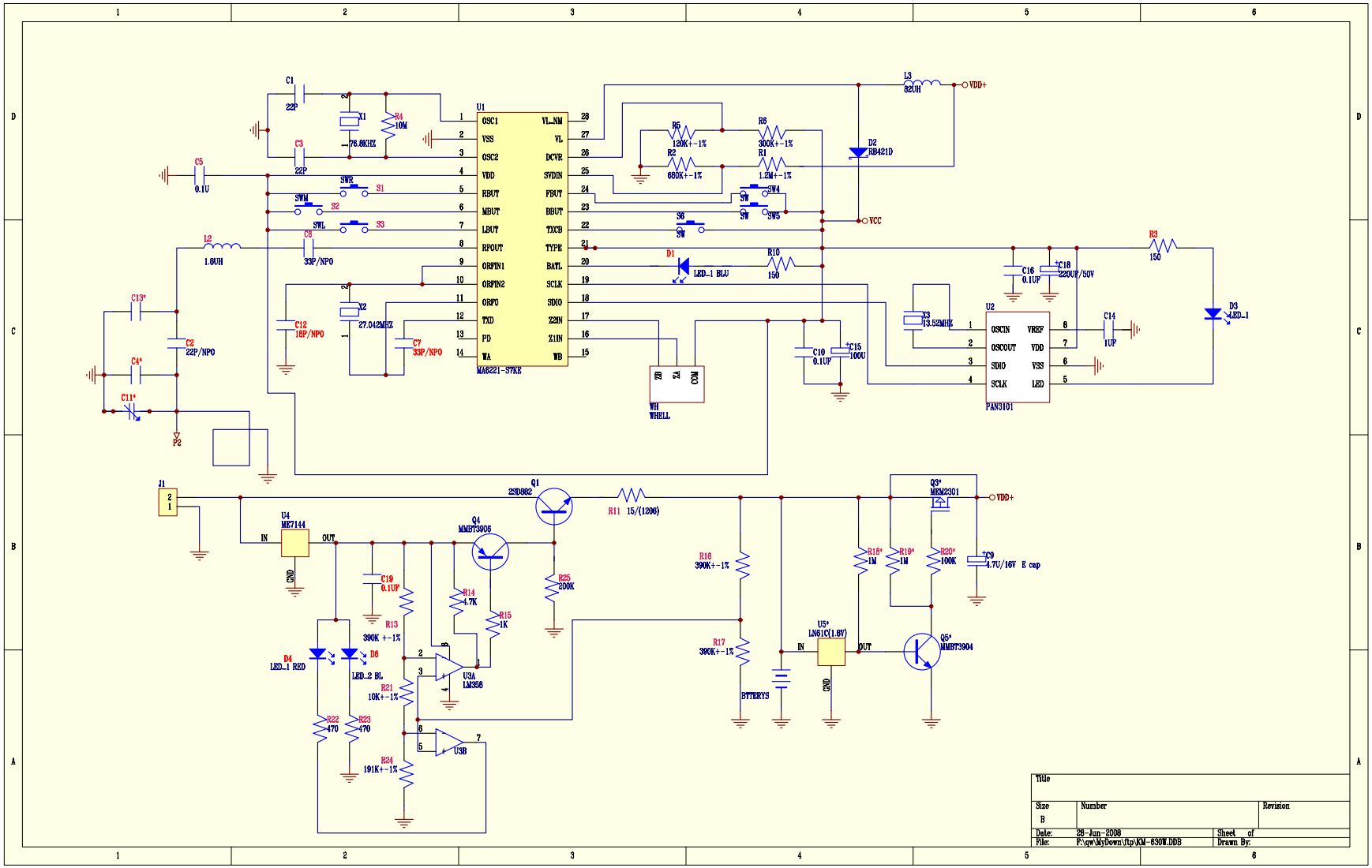
U1
MA6221-S7KE
OSC1
VSS
OSC2
VDD
RBUT
MBUT
LBUT
RPOUT
ORPIN1
ORPIN2
ORPO
TXD
PD
WA
VL_NM
VL
DCVR
SVDIN
FBUT
BBUT
TXCB
TYPE
BATL
SCLK
SDIO
Z2IN
Z1IN
WB
C1 22P
C3 22P
X1 76.8KHZ
R4 10M
C5 0.1U
S1
S2
S3
C6 33P/NPO
L2 1.6UH
C13*
C2 22P/NPO
C4*
C11*
P2
C12 18P/NPO
X2 27.042MHZ
C7 33P/NPO
R5 120K+-1%
R6 300K+-1%
R2 680K+-1%
R1 1.2M+-1%
SW4
SW5
S6
D1 LED_1 BLU
R10 150
L3 82UH
VDD+
D2 RB421D
VCC
R3 150
C16 0.1UF
*C18 220UF/50V
C14 1UF
D3 LED_1
X3 13.52MHZ
U2
PAN3101
OSCIN
OSCOUT
SDIO
SCLK
VREF
VDD
VSS
LED
C10 0.1UF
*C15 100U
WH
WHELL
J1
Q1 2SD882
R11 15/(1206)
U4 ME7144
IN
OUT
GND
Q4 MMBT3906
C19 0.1UF
R13 390K +-1%
R14 4.7K
R15 1K
R25 200K
D4 LED_1 RED
D6 LED_2 BL
U3A LM358
R21 10K+-1%
R22 470
R23 470
R24 191K+-1%
U3B
R16 390K+-1%
R17 390K+-1%
BTTERYS
U5* LM61C(1.6V)
Q3* MEM2301
R18* 1M
R19* 1M
R20* 100K
*C9 4.7U/16V E cap
Q5* MMBT3904
Title
Size B
Number
Revision
Date: 28-Jun-2008
Sheet of
File: F:\qw\MyDown\ftp\KM-630W.DDB
Drawn By: