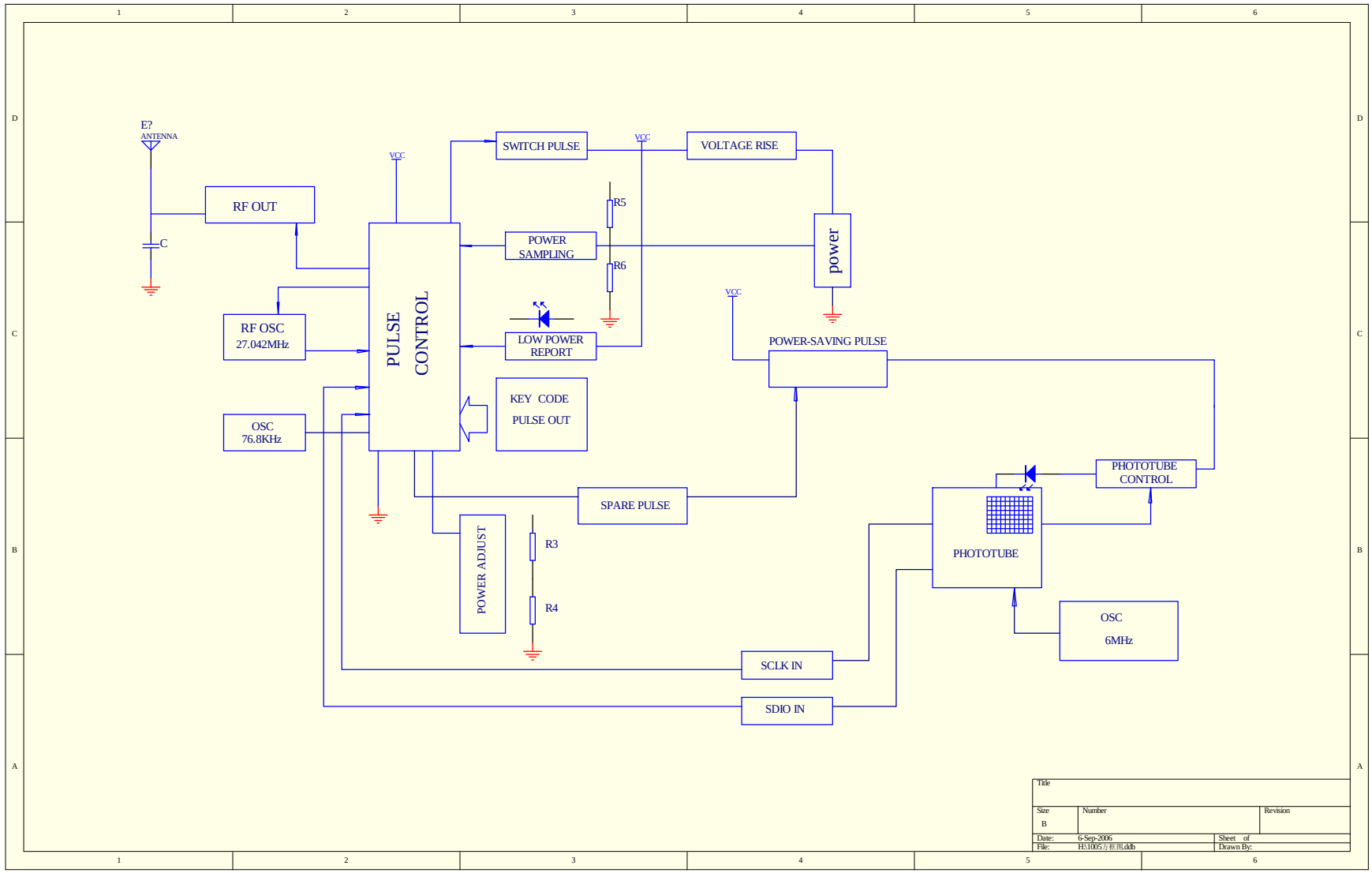

Title		
Size B	Number	Revision
Date: 6-Sep-2006		Sheet of
File: H:\1005 方位 BLddb		Drawn By: