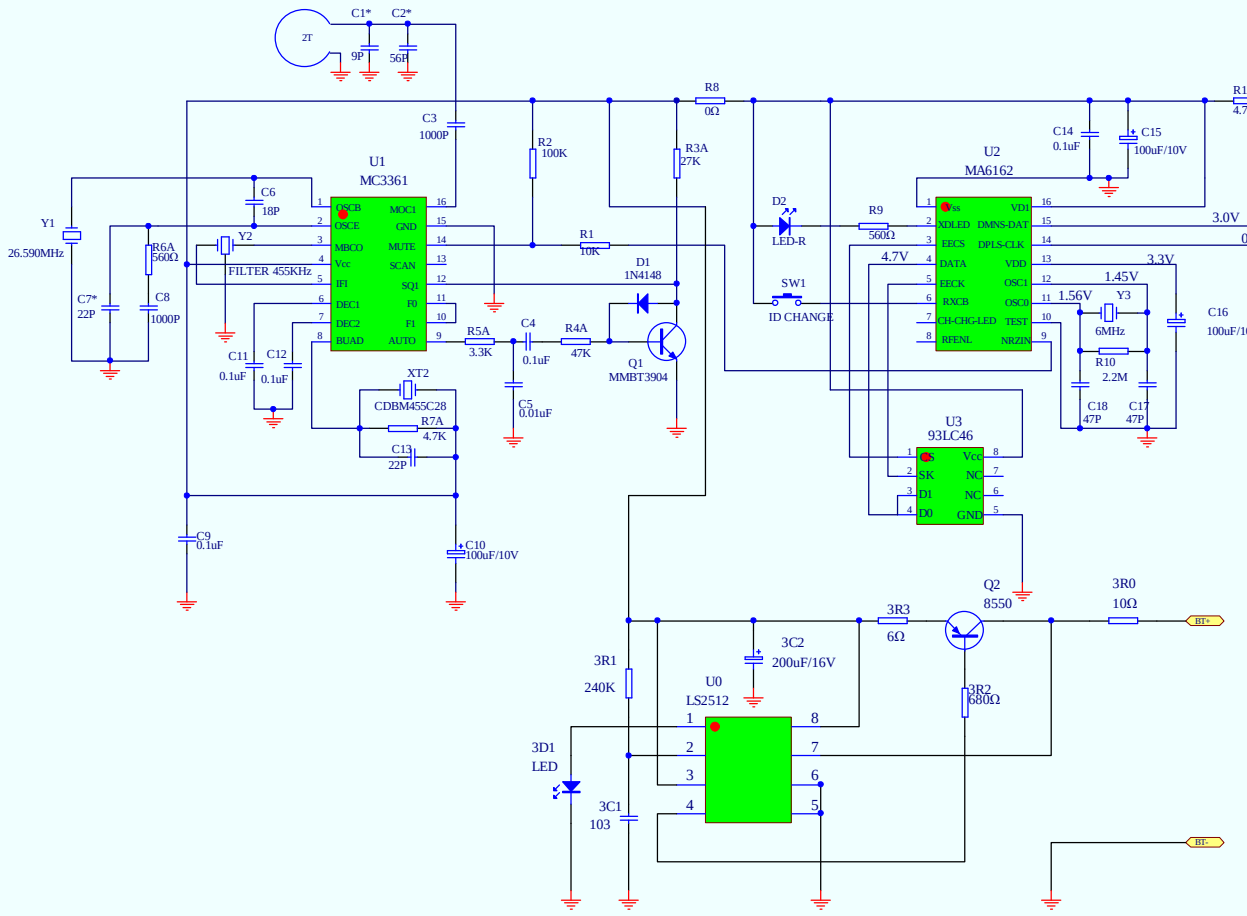

Title			
Size B	Number KM-1004RX充		Revision
Date: 27-Nov-2006		Sheet of	
File: E:\RF Engineer\使用文件\EDW\新档\KM-03\KM-03.Schdoc			