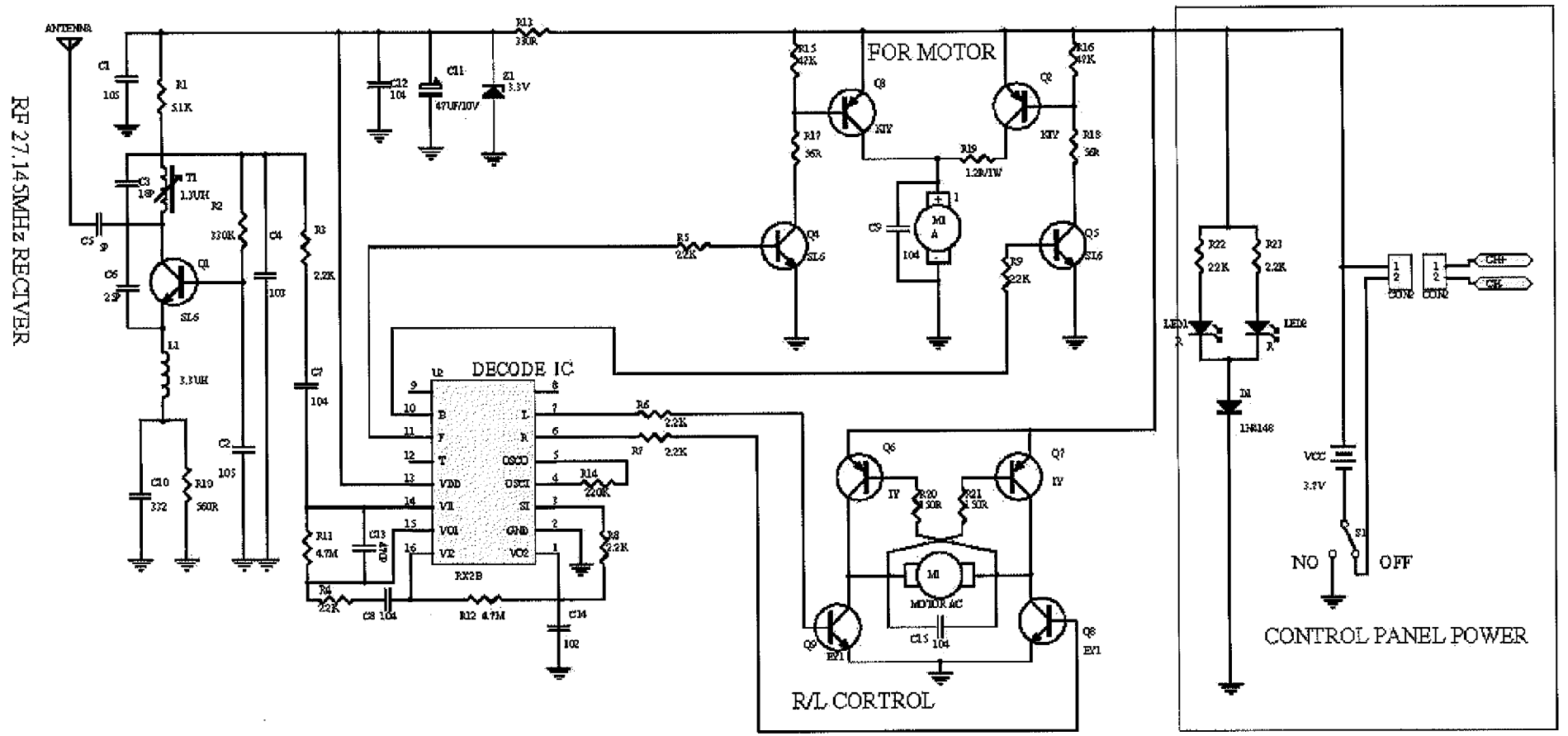

FILE NAME:	RX The circuit Diagram	VERSION:	1	FILE NO:		APPROVED BY:	
PRODUCT NO:		PAGE:	1OF1	PREDARED BY:		DATE:	
COMPANY:	Dynamic Industries Co. Ltd.						