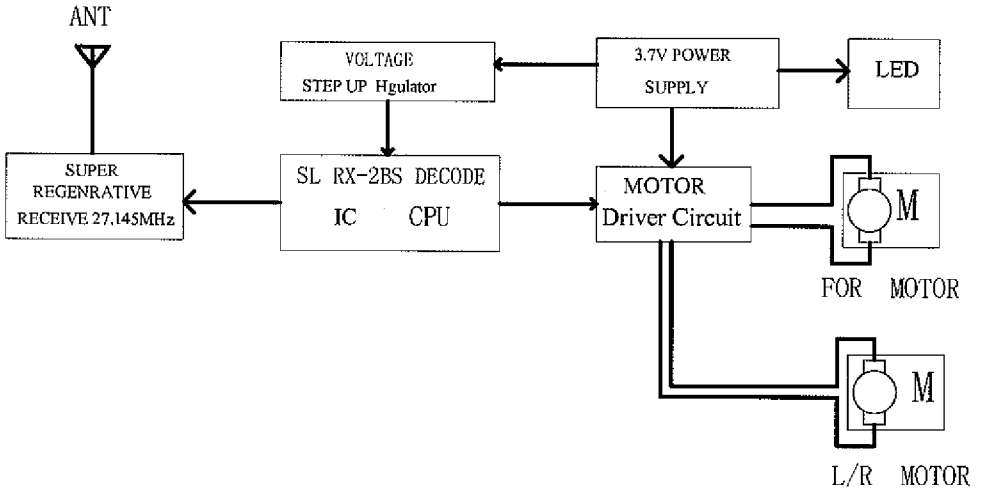

FILE NAME:	27.145MHZ Recive Block Diagram	VERSION:	1	FILE NO:	PEWI00436	APPROVED BY:	
PRODUCT NO:	MEC-648	PAGE:	1OF1	PREDARED BY:		DATE:	2007-3-8
COMPANY:	Dynamic Industries Co. Ltd.						