R1	Initial version	18Sep15
R2	add gift box label,Product label&gift box label:2in1 Updata:Ethernet MAC Address to WAN MAC Address	28Oct15

Scale/1:1
Unit/mm
DO NOT SCALE DRAWING

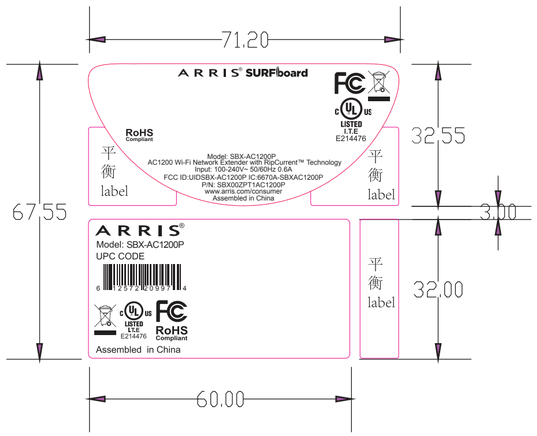

——刀模线不印刷（DIM LINE NO PRINT）

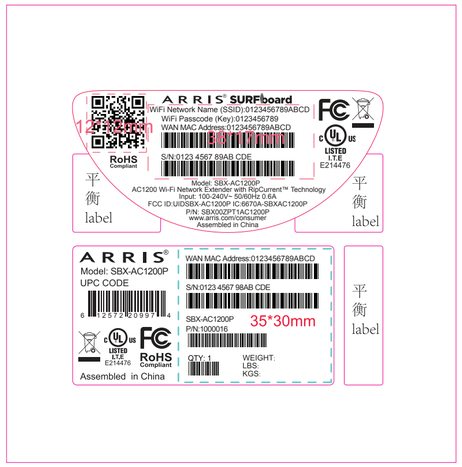

厂内列印示意
(The factory Print example)

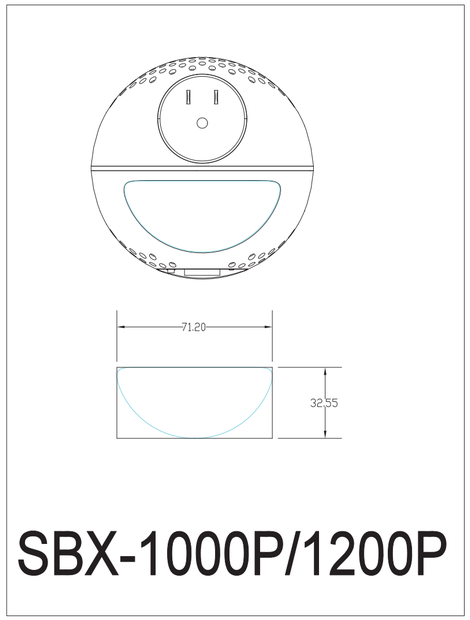

机构匹配尺寸图Scale/1:2

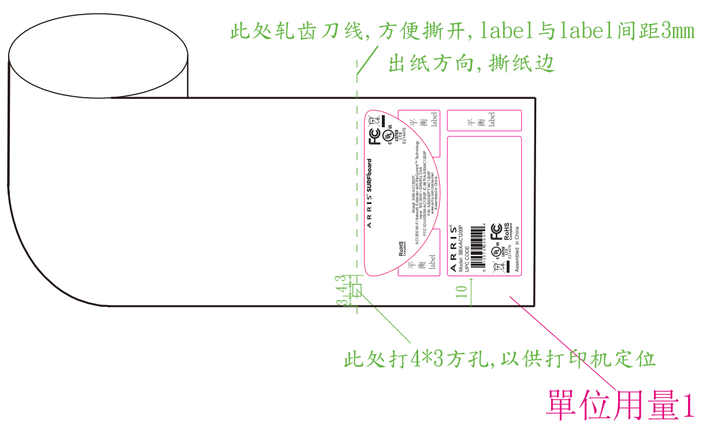

Notes:
1.材質：50#白色Mylar，
上打字用雾面PET
2.背压花胶
3.尺寸/印刷:黑色
4.公差:0.- 0.2mm
5.本料件使用之材料須符合RoHS

Notes:
1.MATERIAL: #50 white Mylar,
Can type with matt PET
2.ADHESIVE:Embossed Adhesive
3.SIZE:as drawing
4.PRINTING COLOR:Black
5.TOLERANCES：0,- 0.2mm
6.The material must off accord RoHS

DONOTSCALEDRAWING

MODEL	SBX-AC1200P	NAME	PLBL+gift box retail label /Arris		SCALE 1 / 1
DSN	Judy Du	PART. NO	932BF500GN(ARMP09529)		SHEET 1 OF 1
CHK	Fanking Fan	MATERIAL	#50 white Mylar	Q' TY 1 PC	REV. 2
APV	Fanking Fan	SERCOM		DIMIN MM	REV. DATE 2015.10.28
FILE					

USED