R1	Release	31Aug15
R2	Add Arris new P/N	04Sep15

Scale/1:1
Unit/mm
DO NOT SCALE DRAWING

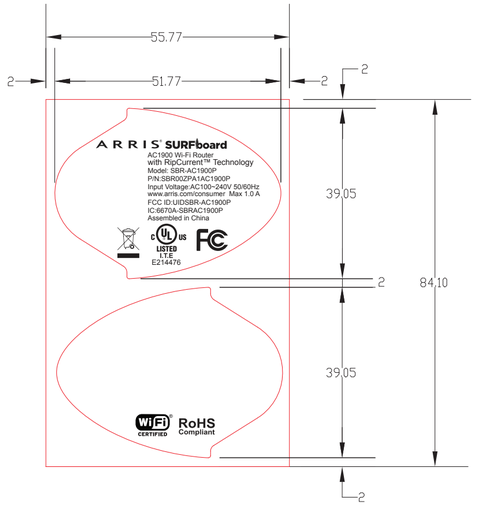

——刀模线不印刷（DIM LINE NO PRINT）

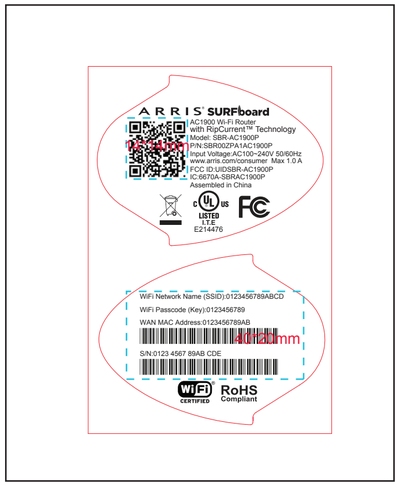

厂内列印示意(The factory Print example)

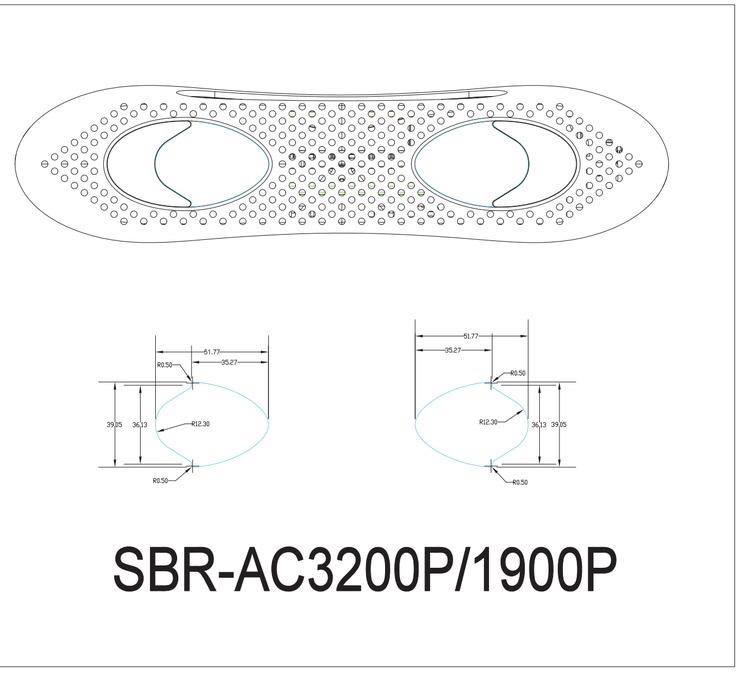

机构匹配尺寸图Scale/1:2

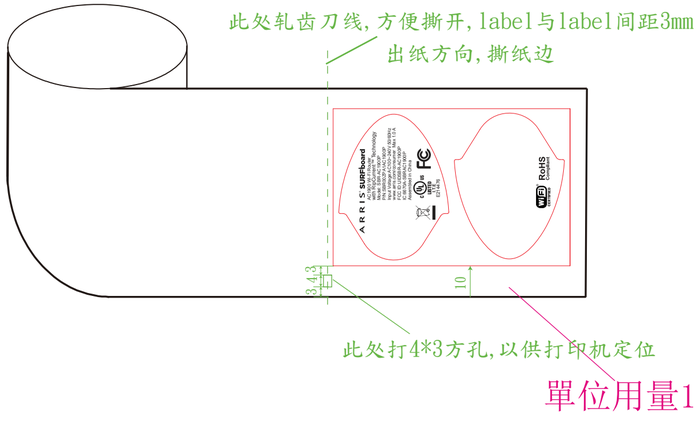

Notes:
1.材質: 50#白色Mylar，上打字用雾PET
2.背压花胶
3.尺寸/印刷:如圖示
4.公差:0.- 0.2mm
5.本料件使用之材料須符合RoHS

Notes:
1.MATERIAL: #50 white Mylar
+Matte PET
2.ADHESIVE:Embossed Adhesive
3.SIZE:as drawing
4.PRINTING COLOR:As note
5.TOLERANCES::0,- 0.2mm
6.The material must off accord RoHS

DONOTSCALEDRAWING

MODEL	SBR-AC1900P	NAME	REGULATORY LBL/Arris		SCALE 1 / 1
DSN	Judy Du	PART. NO	932BF600GN(ARMP09497)		SHEET 1 OF 1
CHK	Fanking Fan	MATERIAL	#50 white Mylar	Q' TY 1 PC	REV. 1
APV	Fanking Fan	SERCOM		DIMIN MM	REV. DATE 2015.09.18
FILE					

USED