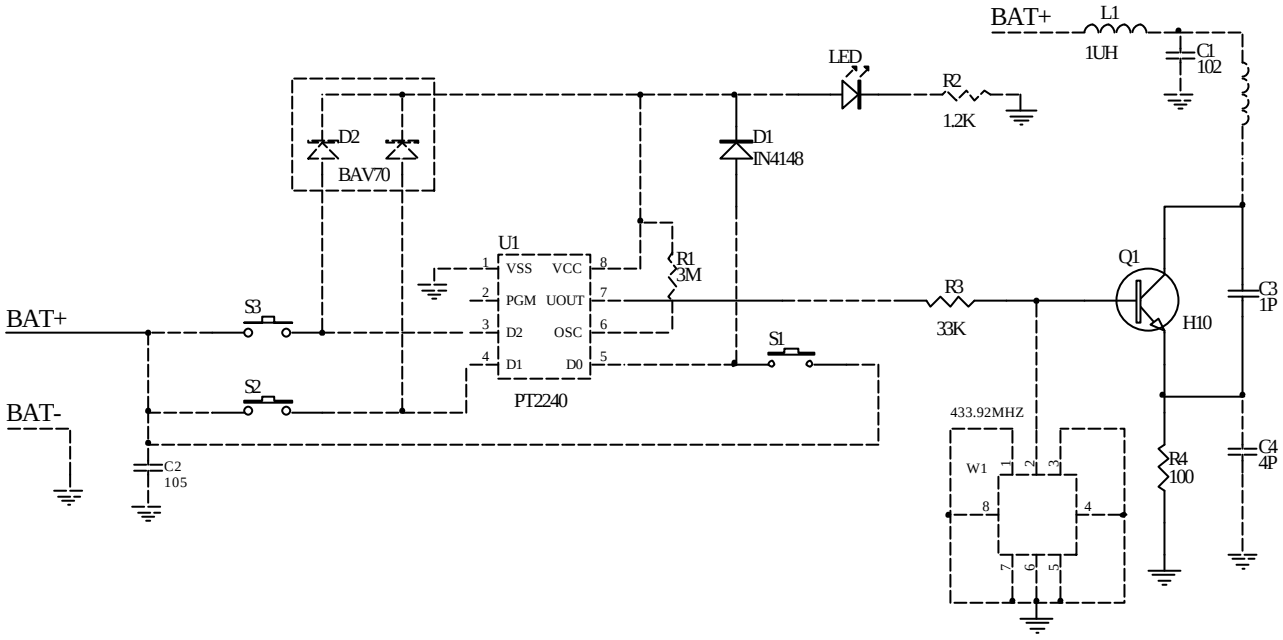

Title	TX077x2	
Size A4	Number TX077X2	Revision
Date: 2-Aug-2006		Sheet of
File: C:\Documents and Settings\d4\桌面\tx077x2.DDB		Drawn By: