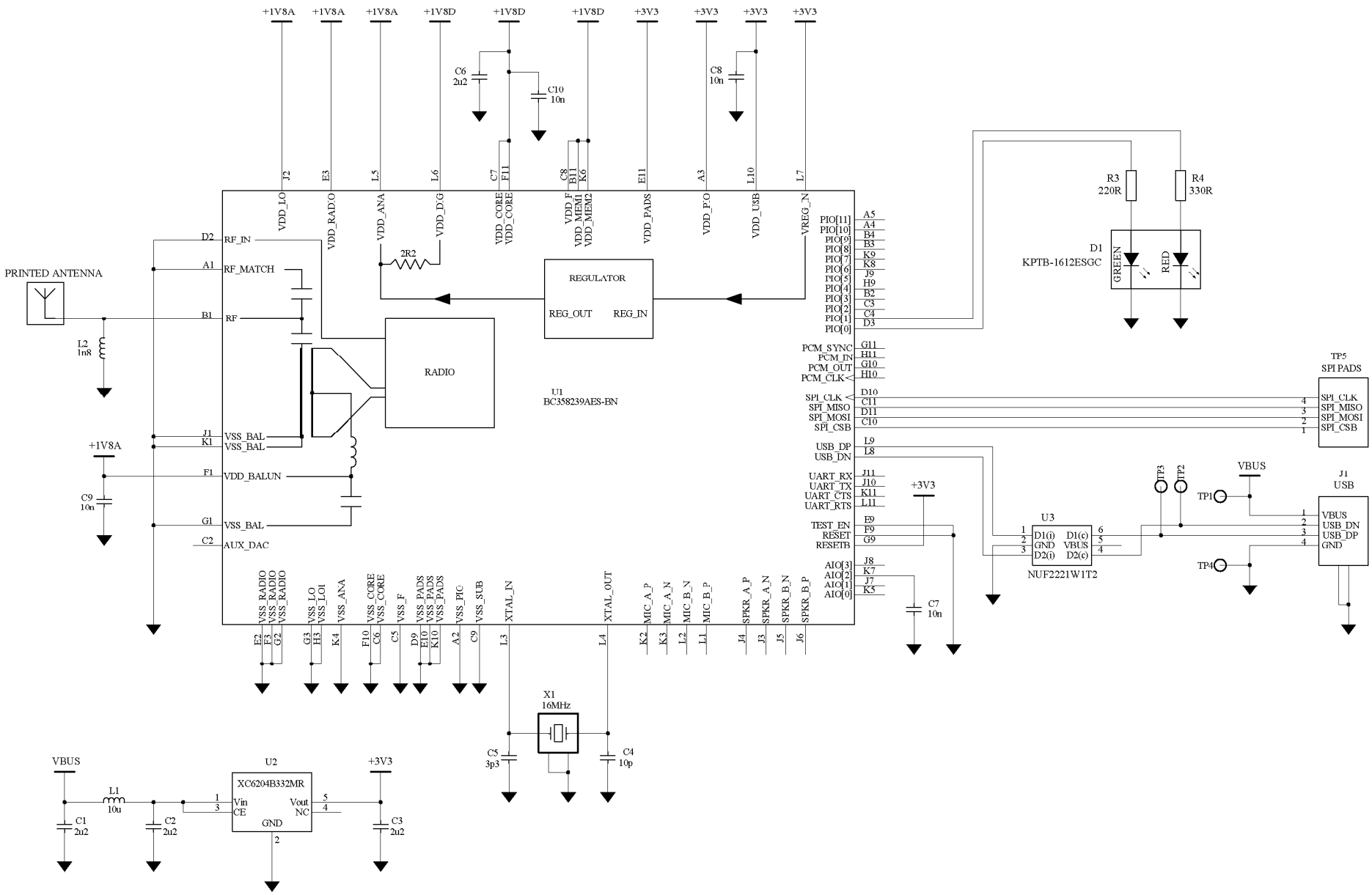

PDF created with FinePrint pdfFactory Pro trial version http://www.fineprint.com