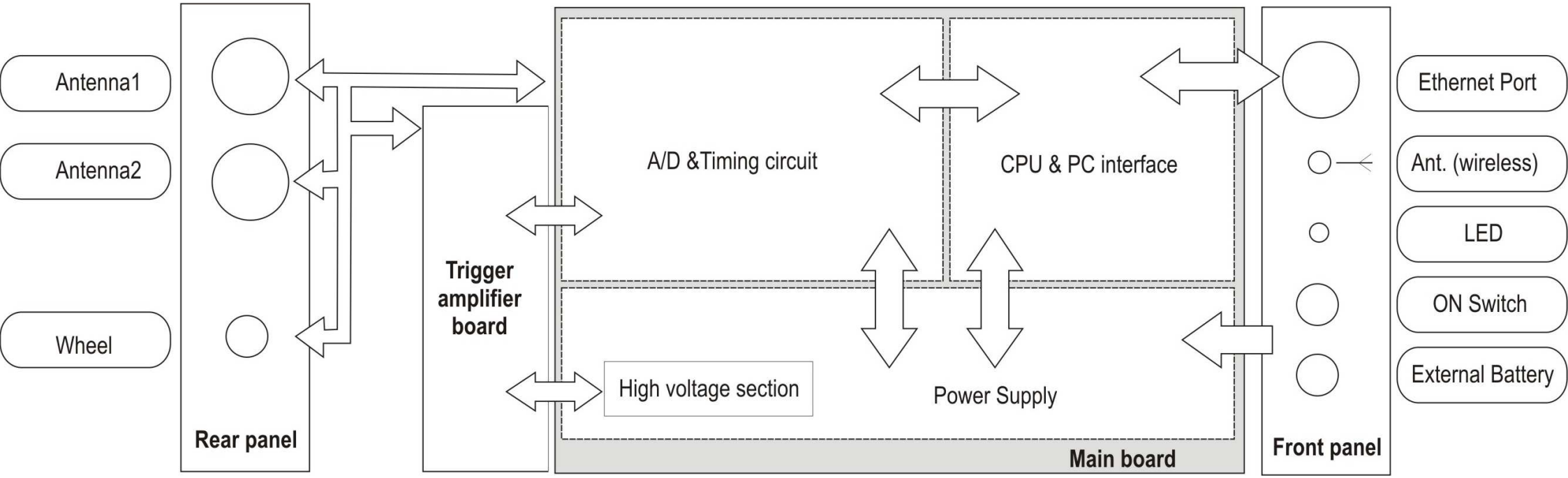
Antenna1
Antenna2
Wheel
Rear panel
Trigger amplifier board
A/D &Timing circuit
CPU & PC interface
High voltage section
Power Supply
Main board
Front panel
Ethernet Port
Ant. (wireless)
LED
ON Switch
External Battery

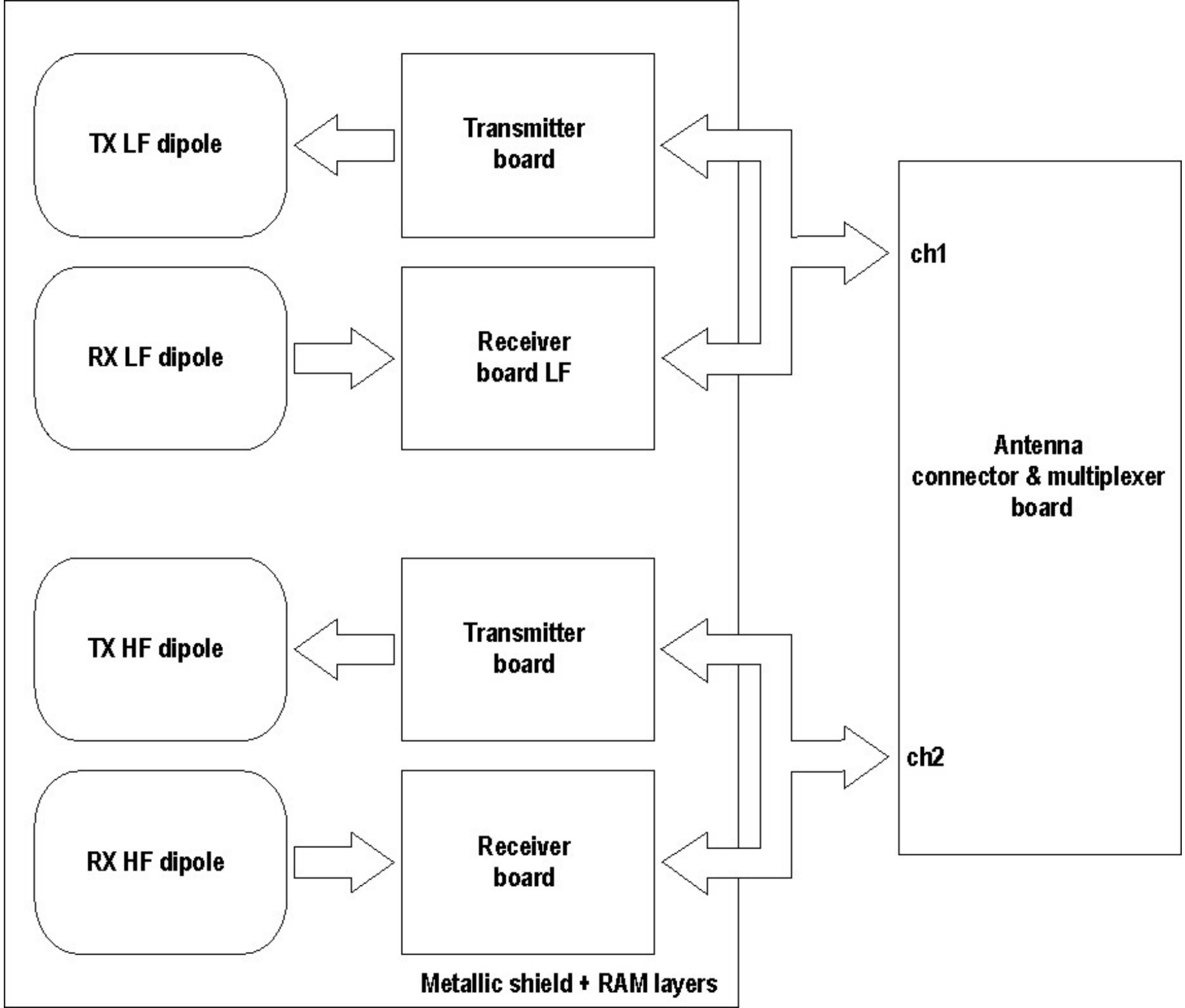
TX LF dipole
Transmitter board
RX LF dipole
Receiver board LF
ch1
Antenna connector & multiplexer board
TX HF dipole
Transmitter board
ch2
RX HF dipole
Receiver board
Metallic shield + RAM layers