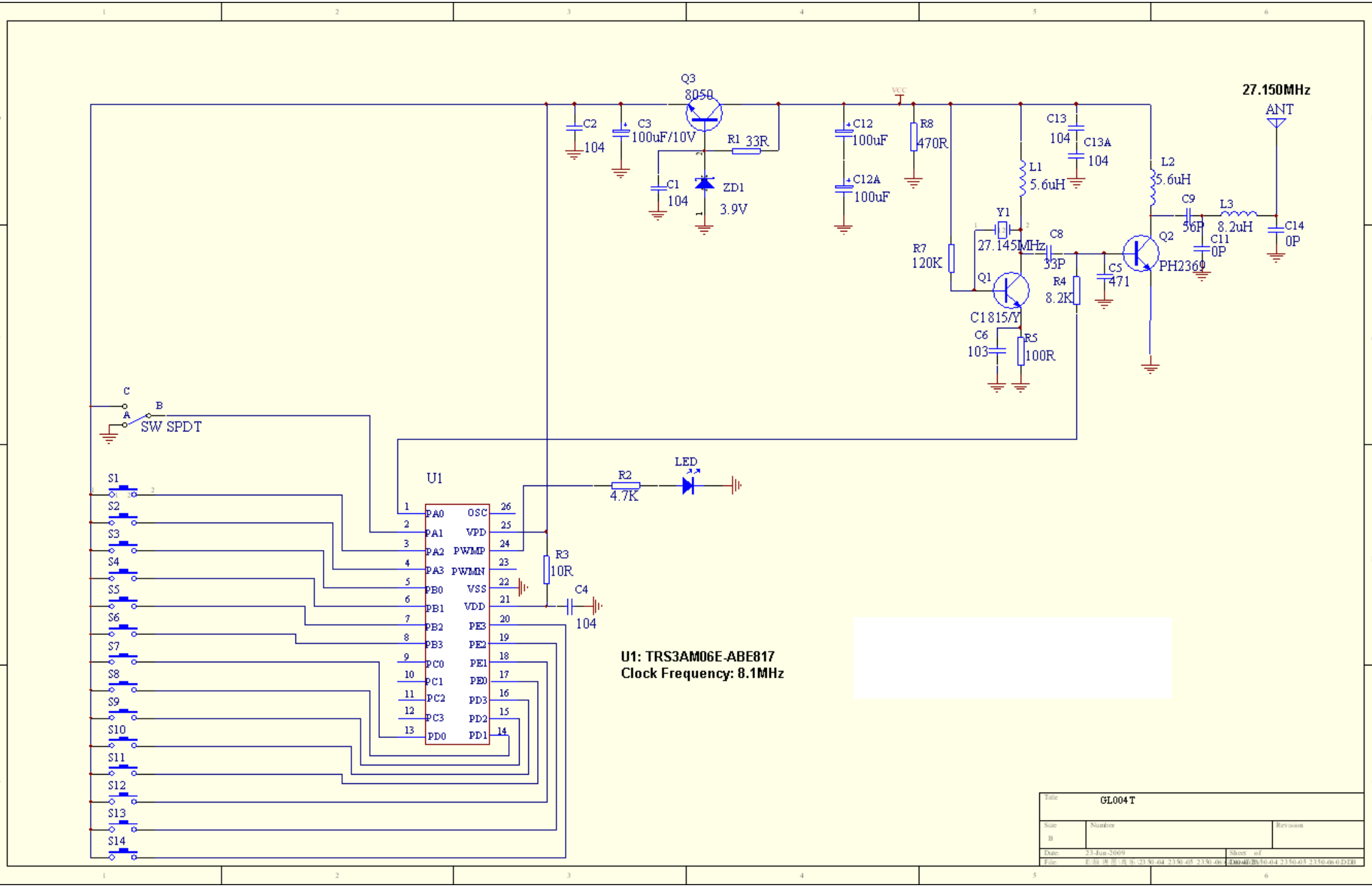
Q3
8050
C2
104
C3
100uF/10V
R1 33R
C1
104
ZD1
3.9V
C12
100uF
C12A
100uF
R8
470R
VCC
L1
5.6uH
C13
104
C13A
104
L2
5.6uH
27.150MHz
ANT
C9
56P
L3
8.2uH
C14
0P
C11
0P
Y1
27.145MHz
C8
33P
Q2
PH2369
R7
120K
Q1
C1815/Y
R4
8.2K
C5
471
C6
103
R5
100R
C
A
B
SW SPDT
U1
S1
S2
S3
S4
S5
S6
S7
S8
S9
S10
S11
S12
S13
S14
PA0
PA1
PA2
PA3
PB0
PB1
PB2
PB3
PC0
PC1
PC2
PC3
PD0
OSC
VPD
PWMP
PWMN
VSS
VDD
PE3
PE2
PE1
PE0
PD3
PD2
PD1
R2
4.7K
LED
R3
10R
C4
104
U1: TRS3AM06E-ABE817
Clock Frequency: 8.1MHz
Title
GL004T
Size
B
Number
Revision
Date
23-Jun-2009
Sheet of