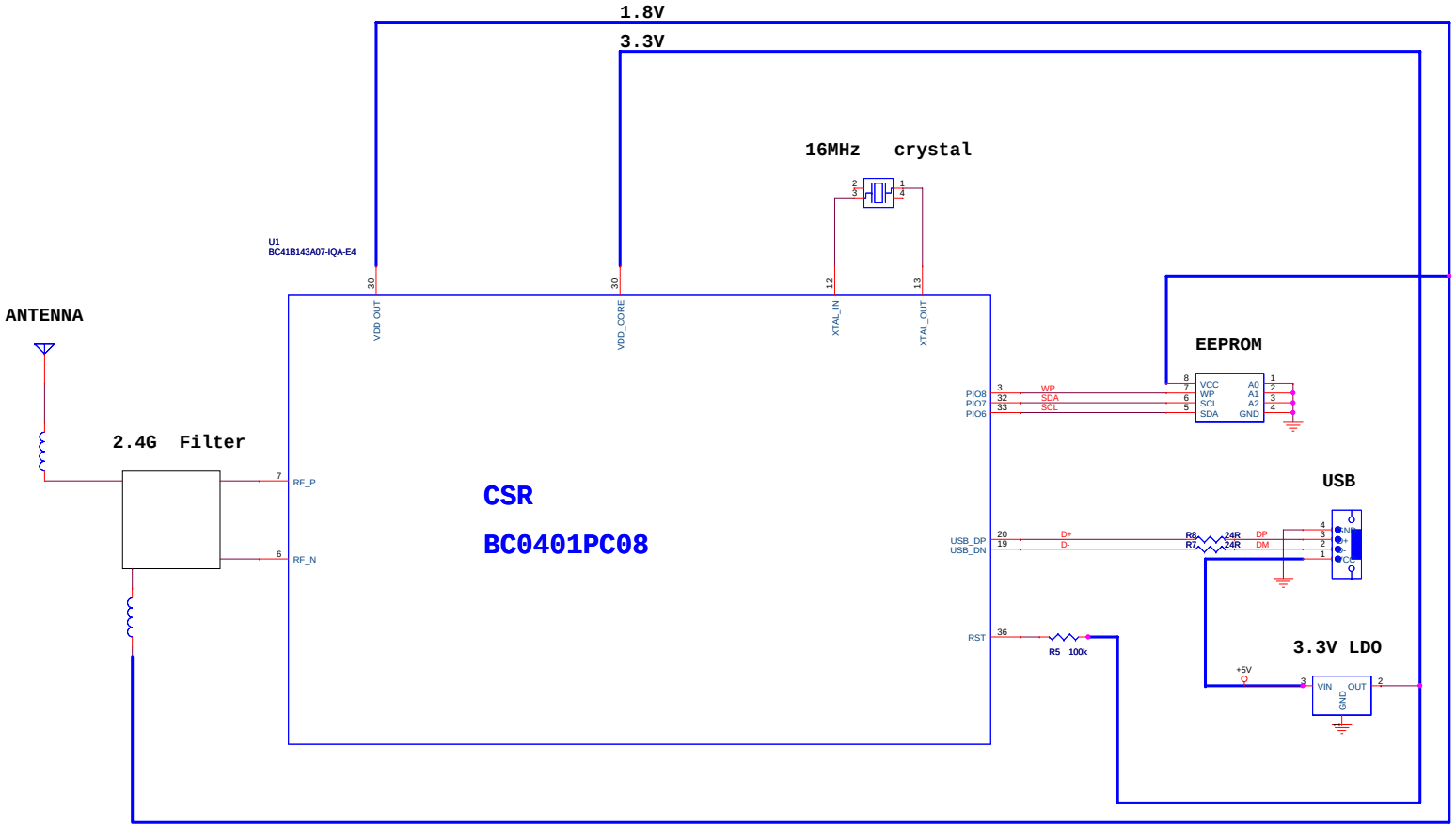

CYBER-BLUE	Product: DONGLE	
DRAWN:	Model: bm32	v 3
CHECKED:	APPROVED:	
Size C	Date: Thursday, November 19, 2009	Sheet 1 of 1