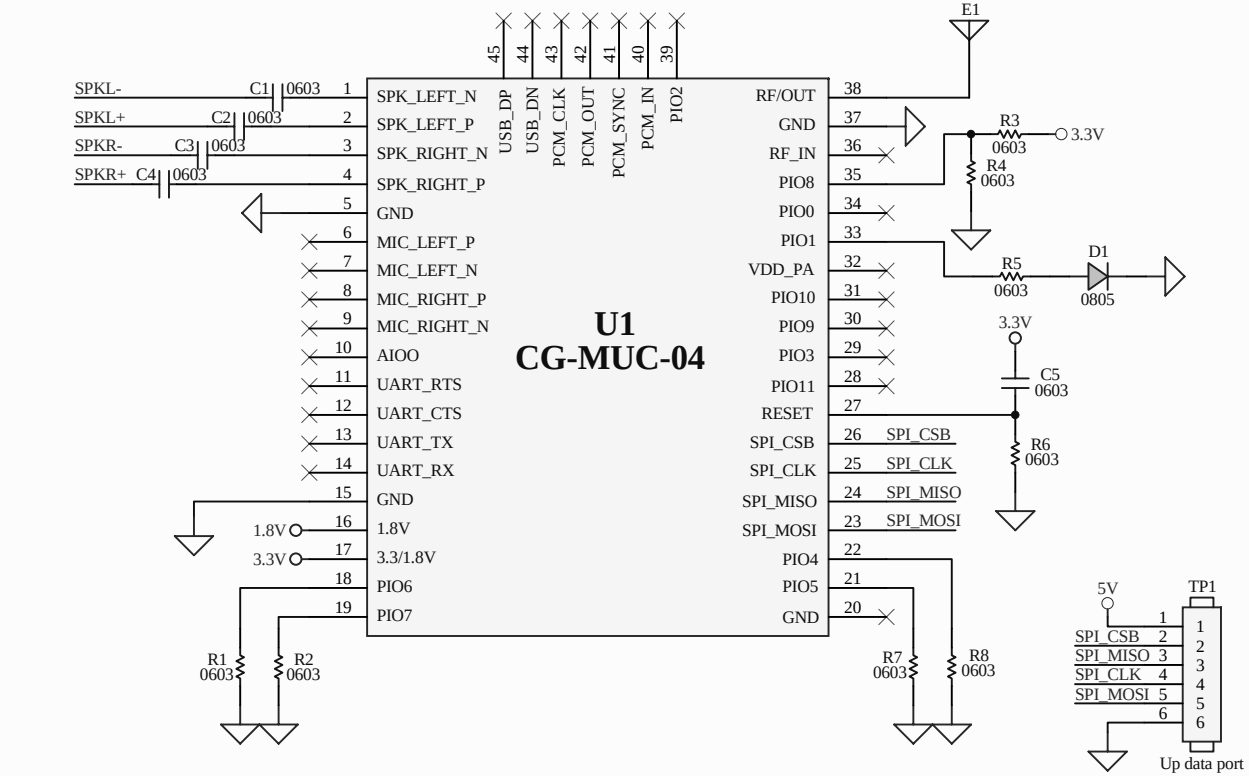

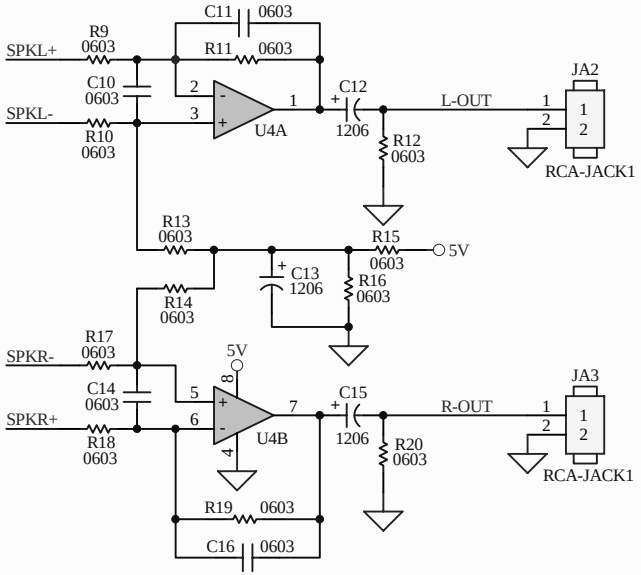

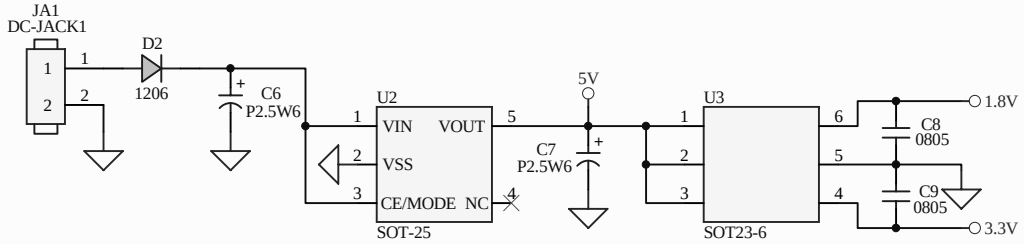

Title		
BTAV01		
Size A4	Number	Revision
Date: 2006/12/27		Sheet of
File: C:\Program Files\..\BTAV01.SchDoc		Drawn By: