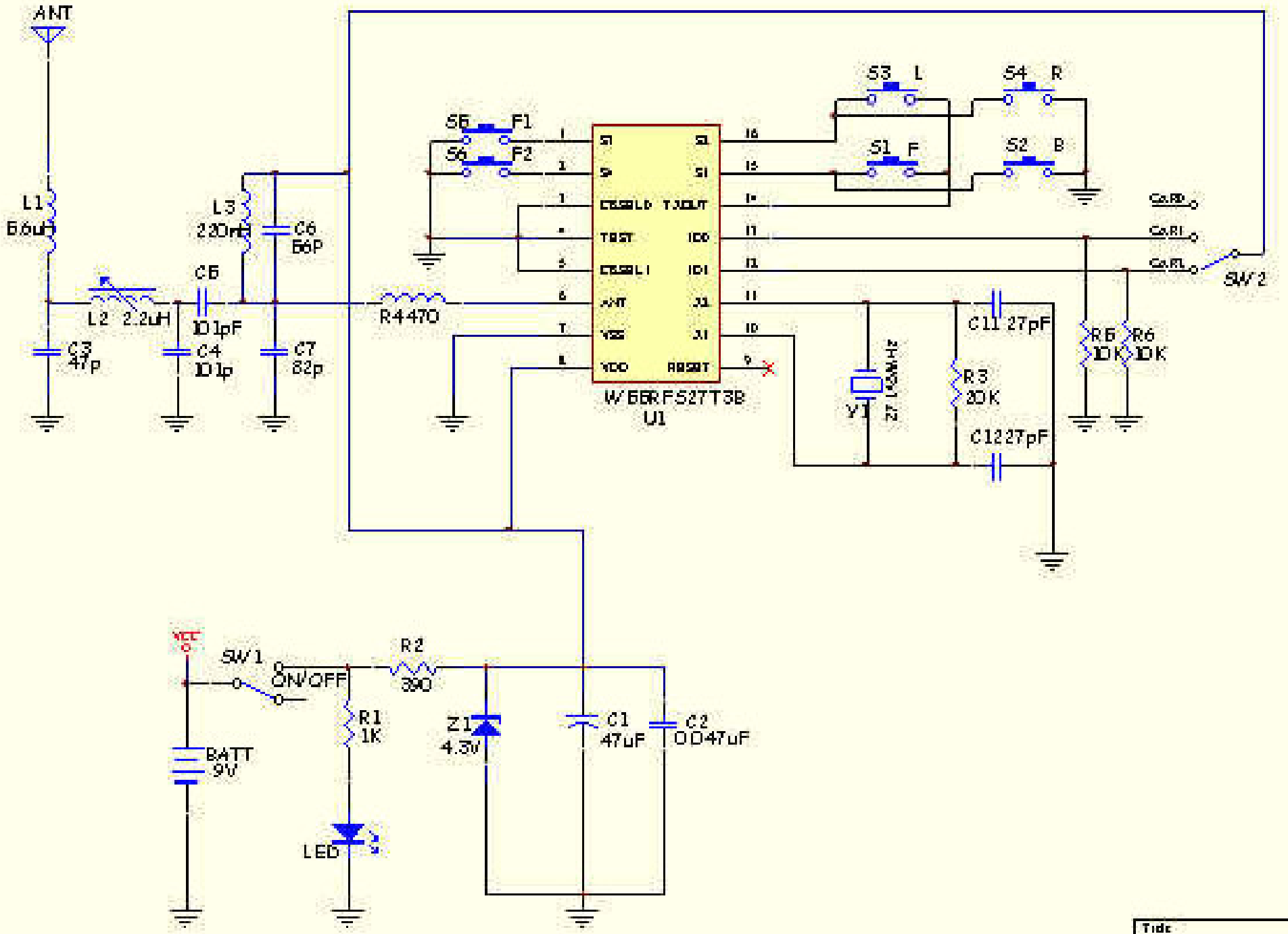

Frequency
27.145MHz
35.42MHz
40.685MHz
40.675MHz

FUNCTION
FORWARD
BACKWARD
LEFT
RIGHT
F1
F2

Title: FCC 样板

Size: A4

Number: T3803 (27MHz