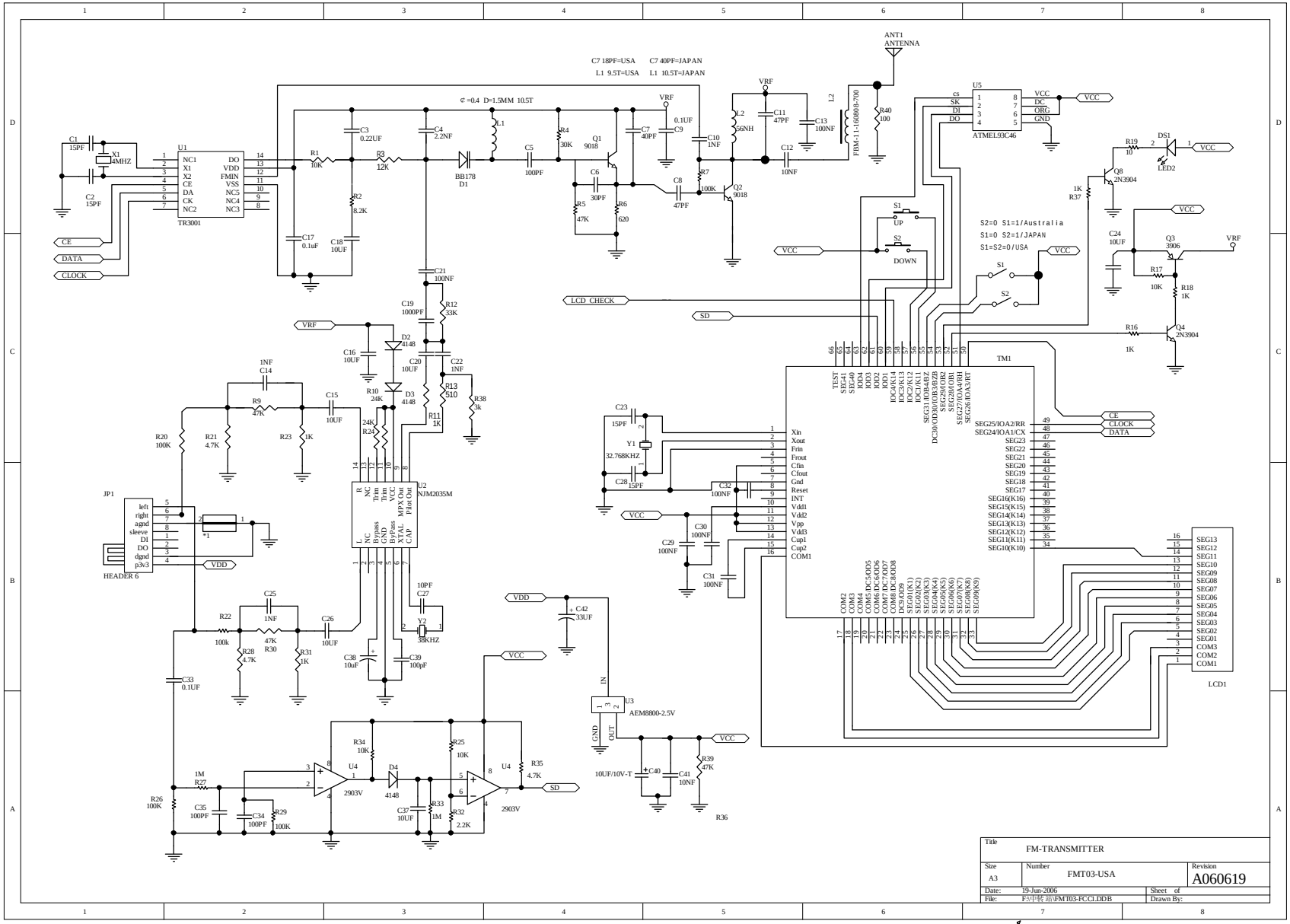


| Title | FM-TRANSMITTER | |
|---|---|---|
| Size A3 | Number FMT03-USA | Revision A060619 |
| Date: 19-Jun-2006 | | Sheet of |
| File: E:\日程表\FMT03-FCC1.DDB | | Drawn By: |

PDF created with pdfFactory trial version www.pdffactory.com