SM902 RX.sch-1 - Sat May 20 09:22:22 2006

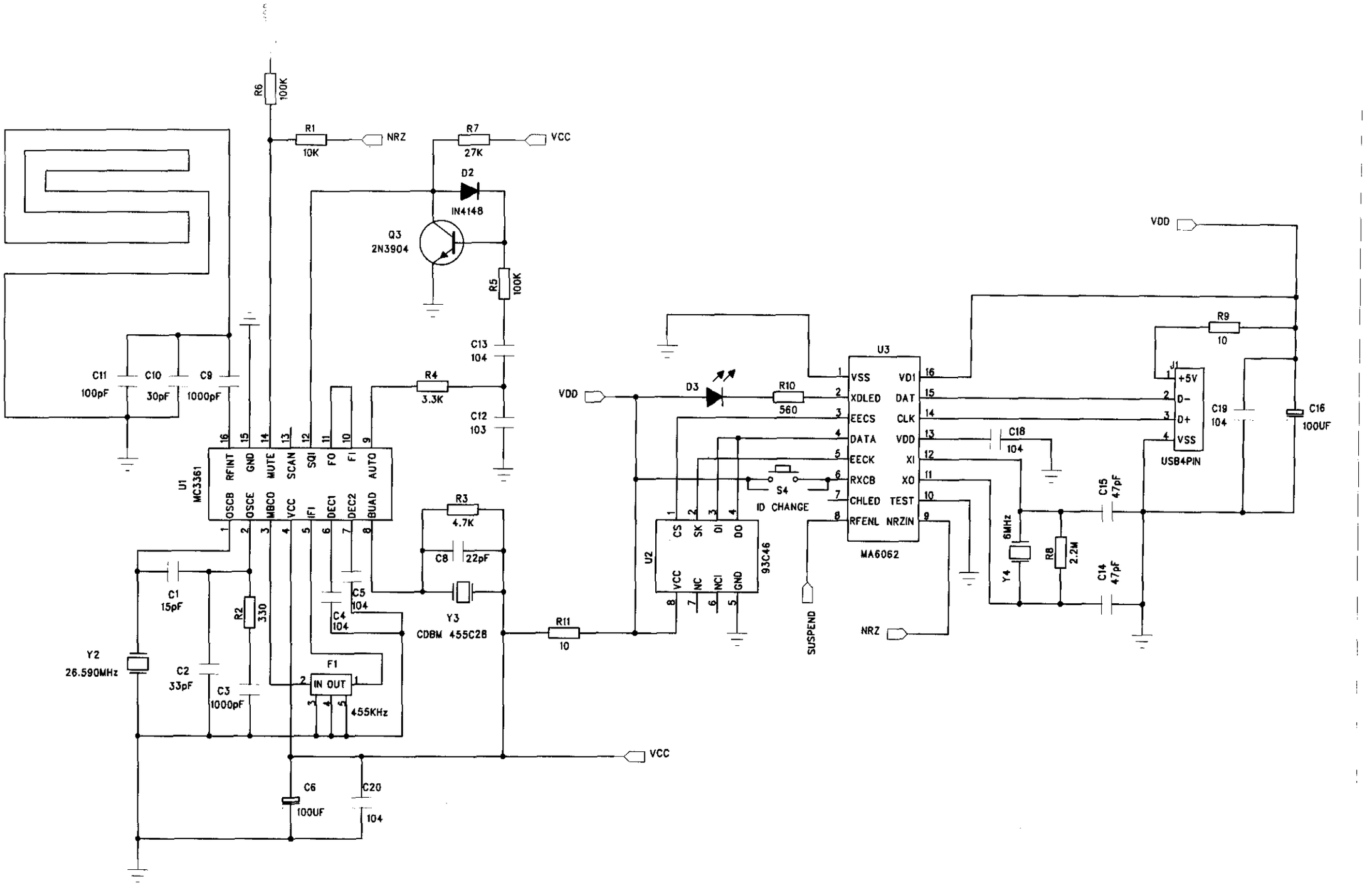

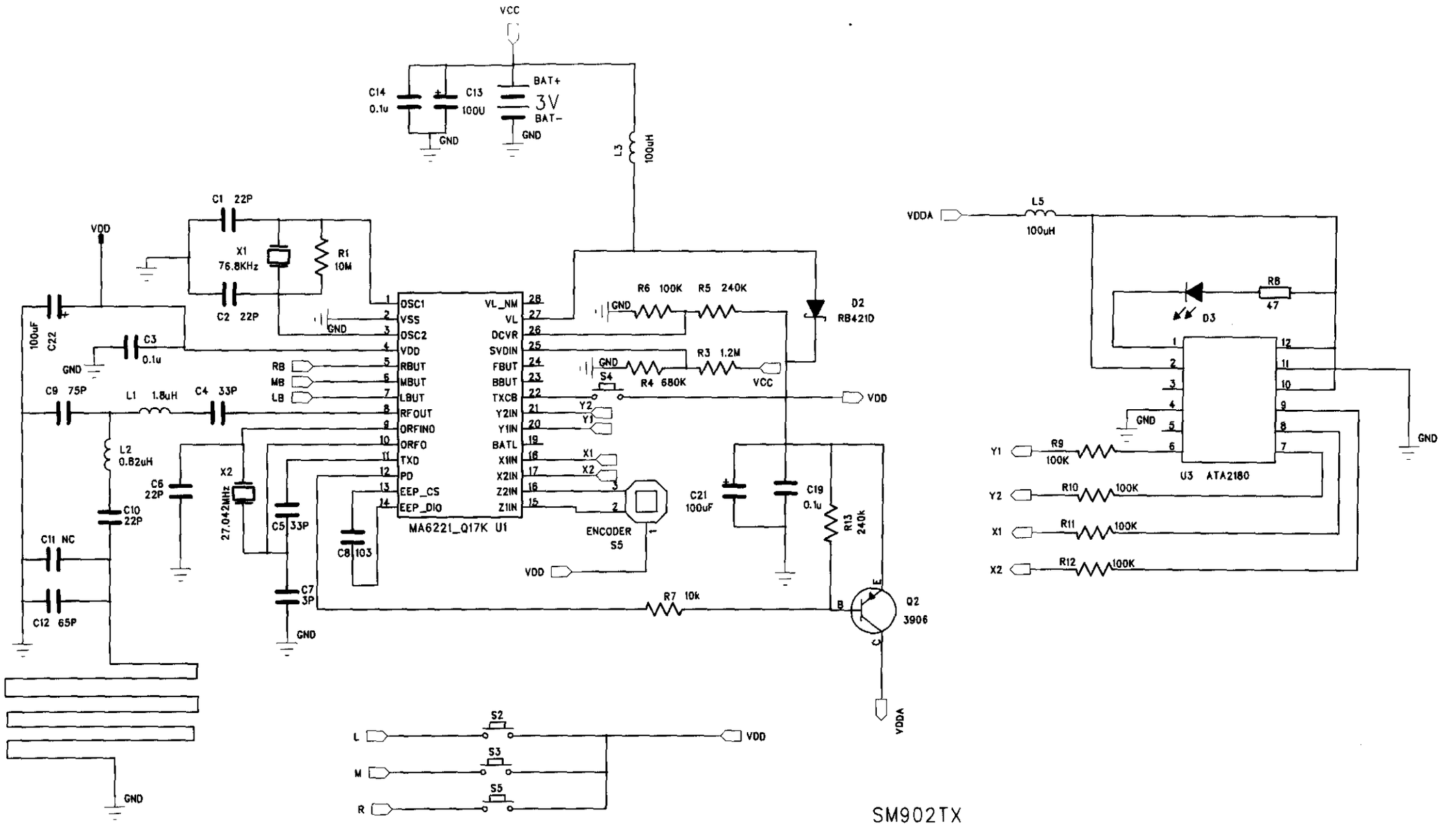
VCC
C14 0.1u
C13 100U
BAT+
3V
BAT-
GND
L3 100uH
C1 22P
X1 76.8KHz
R1 10M
C2 22P
VDD
C22 100uF
C3 0.1u
C9 75P
L1 1.8uH
C4 33P
L2 0.82uH
C6 22P
X2 27.042MHz
C10 22P
C11 NC
C12 65P
C5 33P
C7 3P
C8 103
RB
MB
LB
OSC1
VSS
OSC2
VDD
RBUT
MBUT
LBUT
RFOUT
ORFINO
ORFO
TXD
PD
EEP_CS
EEP_DIO
VL_NM
VL
DCVR
SVDIN
FBUT
BBUT
TXCB
Y2IN
Y1IN
BATL
X1IN
X2IN
Z2IN
Z1IN
MA6221_Q17K U1
R6 100K
R5 240K
D2 RB421D
R3 1.2M
S4
R4 680K
VCC
Y2
Y1
X1
X2
ENCODER S5
C21 100uF
C19 0.1u
R13 240k
R7 10k
Q2 3906
VDDA
S2
S3
S5
L
M
R
L5 100uH
R8 47
D3
U3 ATA2180
R9 100K
R10 100K
R11 100K
R12 100K

SM902TX