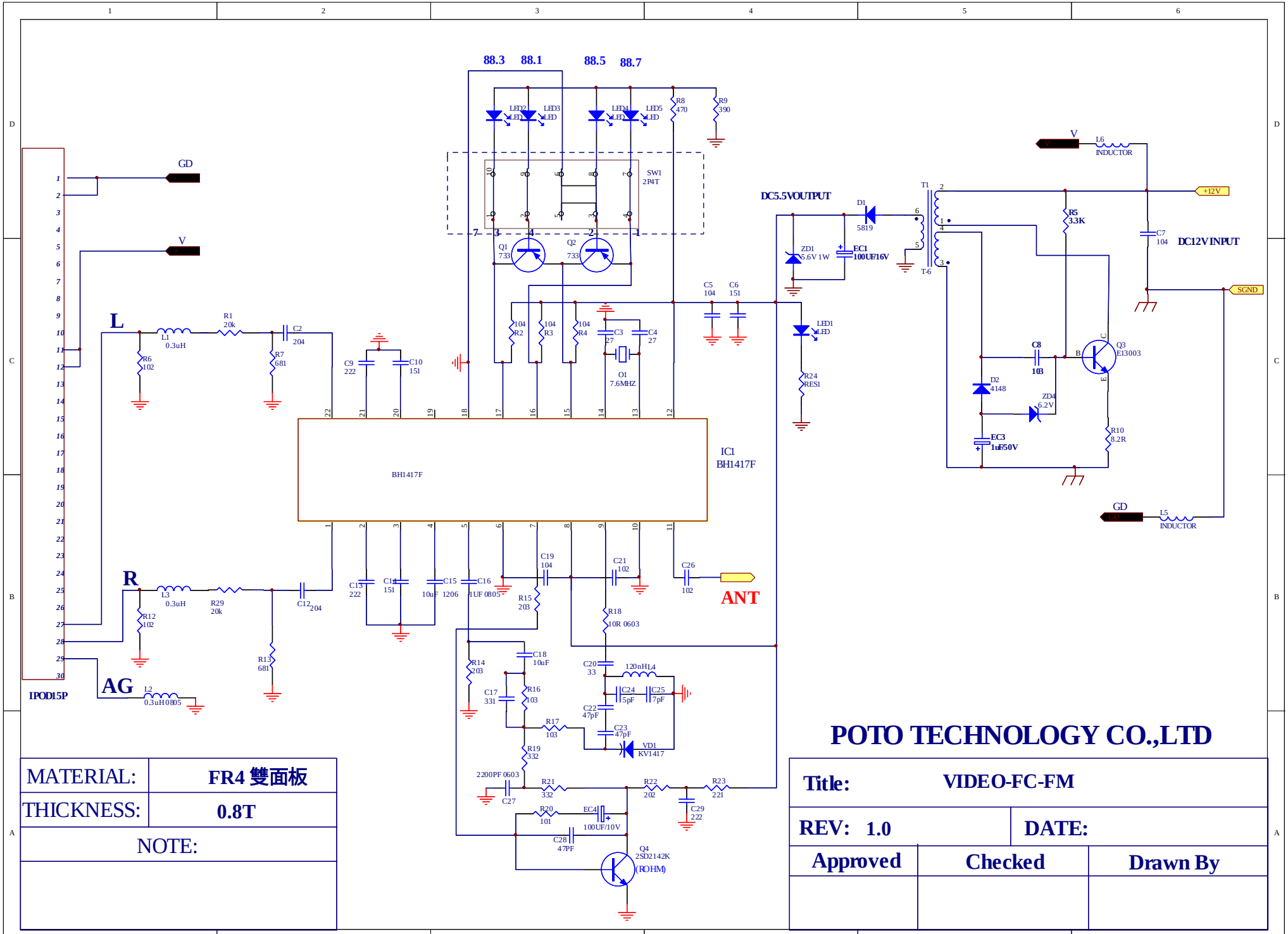

POTO TECHNOLOGY CO.,LTD

MATERIAL:	FR4 雙面板
THICKNESS:	0.8T
NOTE:	

Title:	VIDEO-FC-FM	
REV: 1.0	DATE:	
Approved	Checked	Drawn By