ELECTRIC CONNECTOR TECHNOLOGY

电连技术股份有限公司

APPROVAL SHEET
承 認 書

CUSTOMER NAME (客户名称)	Presonus Audio Electronics
CUSTOMER P/N (客户料号)	
PART NAME (品　　名)	双频剑形天线
ECT P/N (料　　号)	81800T183
APPROVAL REV. 版次	X2
DELIVERY DATE 送样日期	2016.5.17
PREPARED BY (承　　办)	章贝贝
CHECKED BY (审　　核)	熊志辉
APPROVED BY (核　　准)	贾峰

Customer Approved(客户承认)

Approved By (核 准)	Checked By (审 核)	Prepared By (承 办)

产品规格书

Product Specification

Content

目录

1. Product Application/产品应用：.....3
2. The test environment, equipment/测试环境、设备.....3
3. Technology Parameters/技术参数.....5
4 The gain and efficiency test/增益和效率测试.....8
5. Usage Precaution/使用禁忌或注意事项.....9
6. Picture/实物图片.....9
附录：工程图、包规图、尺寸报告、Rohs 清单

1. Product Application/产品应用：

Terminal of the antenna products can only be used for antenna./该天线产品只能用于天线的终端。

2. The test environment, equipment/测试环境、设备

Item 项目	Description 项目描述	Test Condition/测试条件	Requirement /规格要求
2.1	Passivetesting /无源测试	The VSWR measurement devices are connected in sequence: Agilent5071C Network Analyzer →measurementCable → Customer-providing Devices. （VSWR 测量装置依次连接：网络分析仪测量电缆 agilent5071c→→客户提供终端。）	SWR： 2.4GHz≤2.5 2.45GHz≤2.5 2.5GHz≤2.5 5.15GHz≤2.5 5.85GHz≤2.5
		Test equipment/测试设备	
		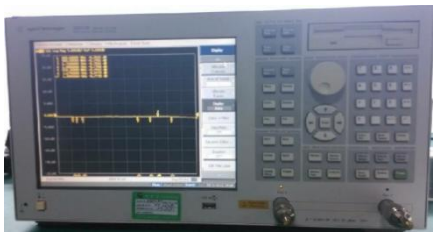	

2.2	Microwave Anechoic 微波暗室	Test equipment/测试设备 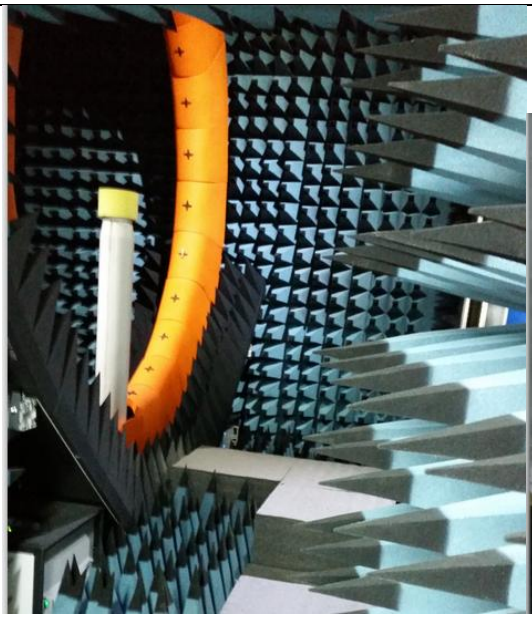
2.3	CMW500 AgilentNB1828 Agilent5071C Agilent8960	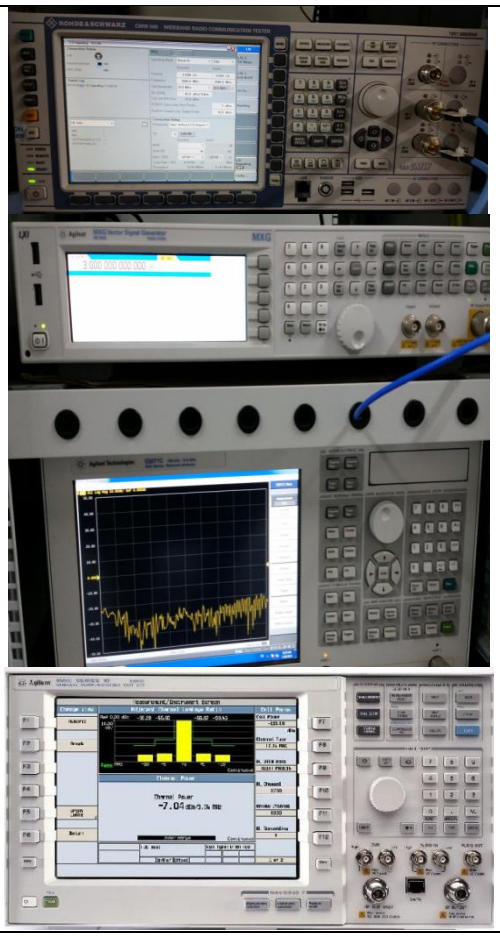

3. Technology Parameters/技术参数

Frequency Range/频率范围： 700Mhz-6GHz
Operating Humidity/工作湿度： 95%R.H.MAX
Temperature Rating/温度范围： -40℃～+70℃

3.1 Log mag/回波损耗、SWR/驻波比：

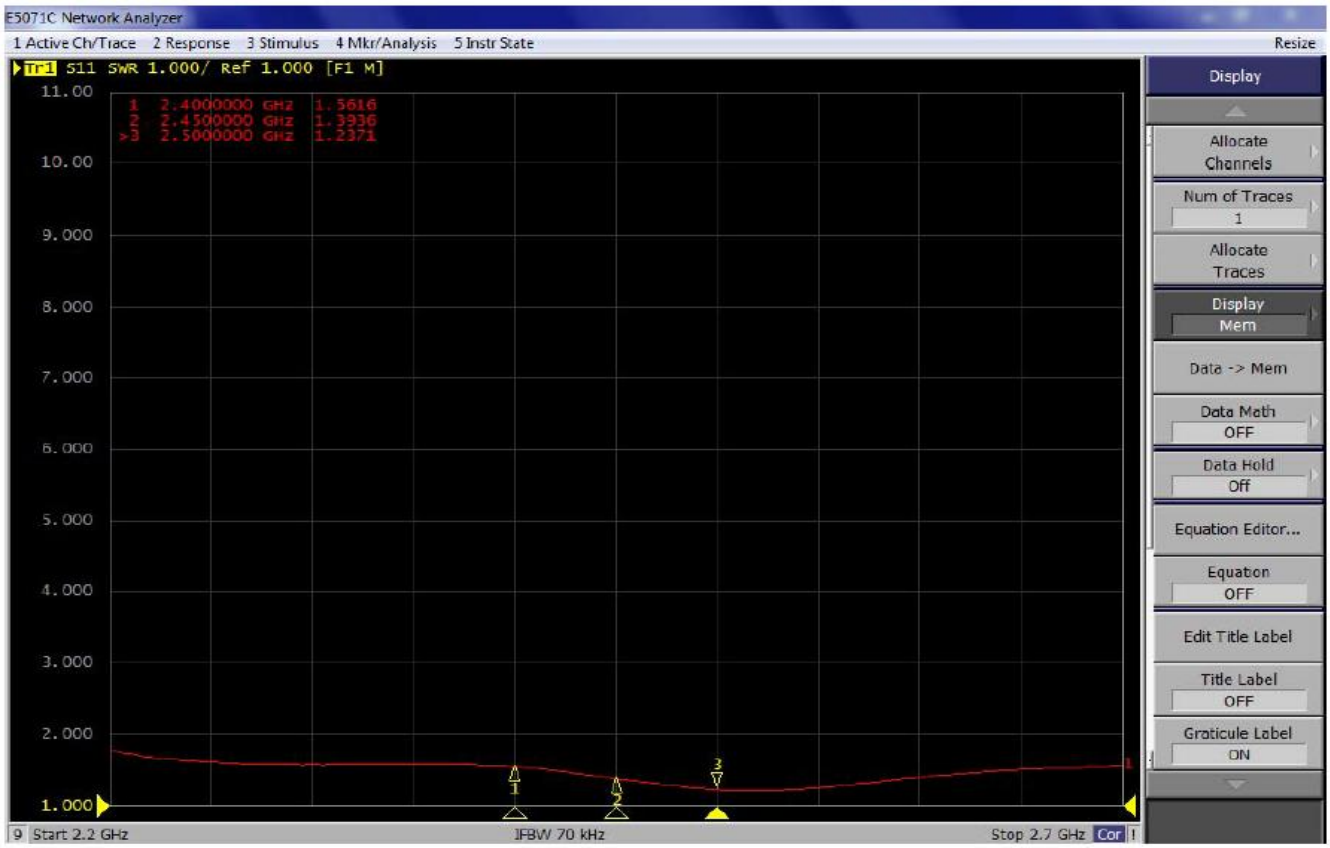
E5071C Network Analyzer
1 Active Ch/Trace 2 Response 3 Stimulus 4 Mkr/Analysis 5 Instr State
Resize
Tr1 S11 SWR 1.000/ Ref 1.000 [F1 M]
1 2.4000000 GHz 1.5616
2 2.4500000 GHz 1.3936
>3 2.5000000 GHz 1.2371
11.00
10.00
9.000
8.000
7.000
6.000
5.000
4.000
3.000
2.000
1.000
9 Start 2.2 GHz
IFBW 70 kHz
Stop 2.7 GHz
Display
Allocate Channels
Num of Traces
1
Allocate Traces
Display Mem
Data -> Mem
Data Math
OFF
Data Hold
Off
Equation Editor...
Equation
OFF
Edit Title Label
Title Label
OFF
Graticule Label
ON

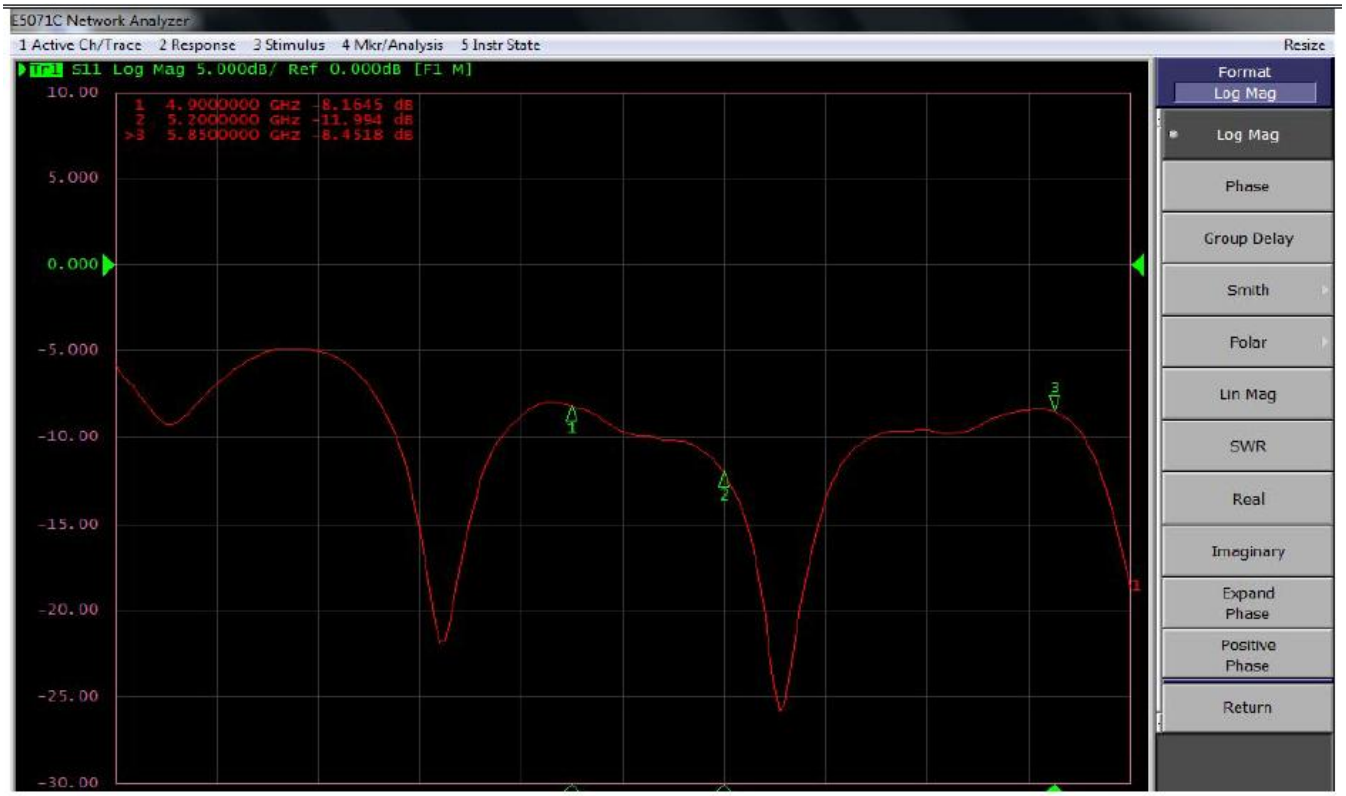
E5071C Network Analyzer
1 Active Ch/Trace 2 Response 3 Stimulus 4 Mkr/Analysis 5 Instr State
Resize
Tr1 S11 Log Mag 5.000dB/ Ref 0.000dB [F1 M]
1 4.9000000 GHz -8.1645 dB
2 5.2000000 GHz -11.984 dB
>3 5.8500000 GHz -8.4518 dB
10.00
5.000
0.000
-5.000
-10.00
-15.00
-20.00
-25.00
-30.00
Format
Log Mag
Log Mag
Phase
Group Delay
Smith
Polar
Lin Mag
SWR
Real
Imaginary
Expand Phase
Positive Phase
Return

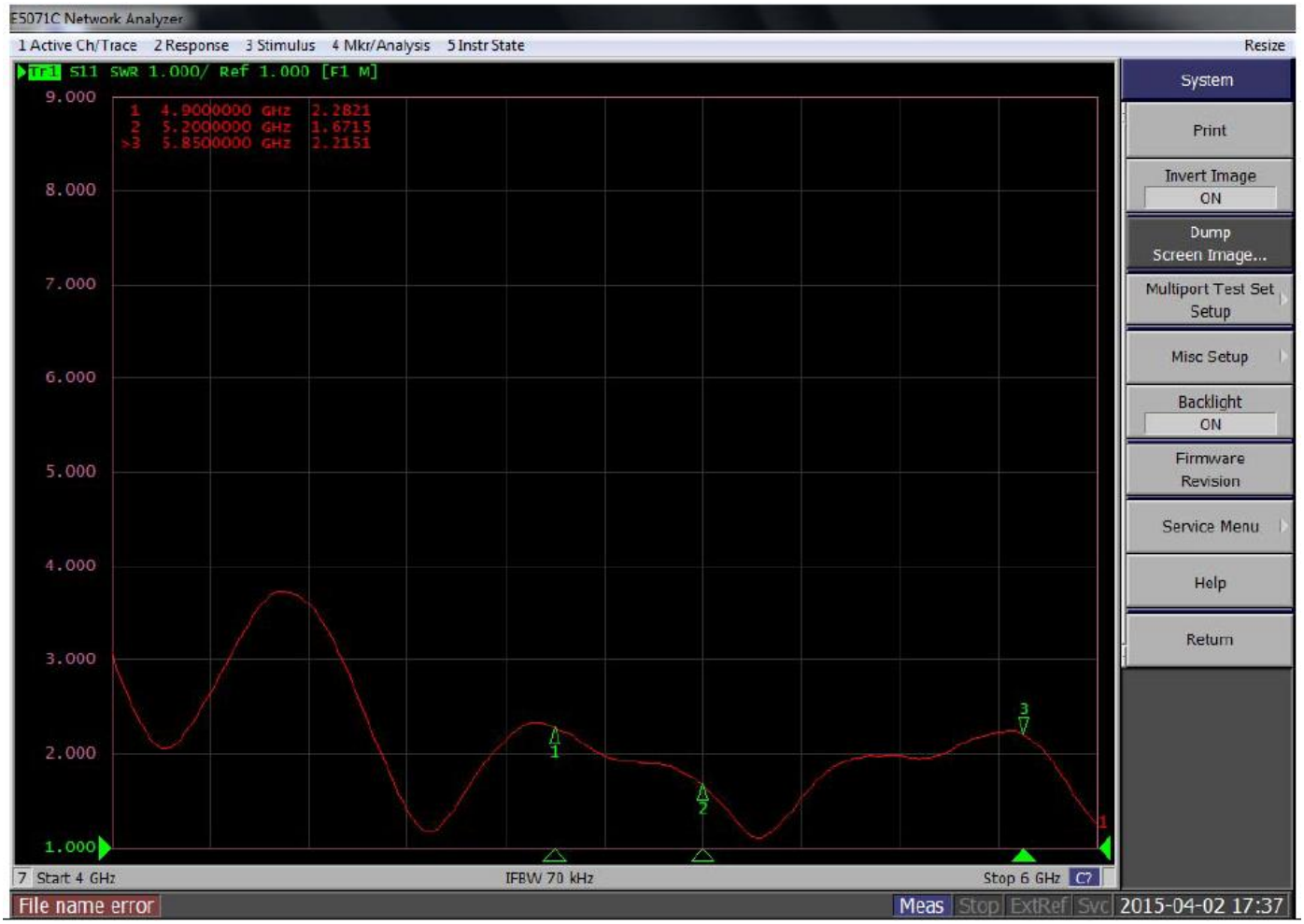
E5071C Network Analyzer
1 Active Ch/Trace 2 Response 3 Stimulus 4 Mkr/Analysis 5 Instr State
Resize
Tr1 S11 SWR 1.000/ Ref 1.000 [F1 M]
1 4.9000000 GHz 2.2821
2 5.2000000 GHz 1.6715
>3 5.8500000 GHz 2.2151
9.000
8.000
7.000
6.000
5.000
4.000
3.000
2.000
1.000
7 Start 4 GHz
IFBW 70 kHz
Stop 6 GHz
File name error
Meas Stop ExtRef Svc 2015-04-02 17:37
System
Print
Invert Image ON
Dump Screen Image...
Multiport Test Set Setup
Misc Setup
Backlight ON
Firmware Revision
Service Menu
Help
Return

4. gain and efficiency test/增益和效率测试

Frequency	Efficiency ( )	Peak Gain(dBi)
2400MHz	80.36%	3.57
2410MHz	83.76%	3.82
2420MHz	82.97%	3.80
2430MHz	80.06%	2.65
2440MHz	82.30%	3.82
2450MHz	83.21%	3.87
2460MHz	81.17%	3.76
2470MHz	80.84%	3.76
2480MHz	79.79%	3.73
2490MHz	80.48%	3.81
2500MHz	75.97%	3.68

Frequency	Efficiency ( )	Peak Gain(dBi)
5700MHz	46.63%	2.12
5720MHz	44.88%	2.03
5740MHz	46.46%	2.20
5760MHz	45.51%	2.00
5780MHz	49.30%	2.57
5800MHz	52.36%	2.61
5820MHz	51.45%	2.59
5840MHz	50.41%	2.57
5860MHz	49.53%	2.55

5. Usage Precaution/使用禁忌或注意事项

No	Items 项目	Matter 事项
5.1	Precautions 禁忌	Do not disassemble/请勿拆卸 Do not bend strength/不可强力折弯
No	Items 项目	Matter 事项
5.2	Stockpile condition 存储条件	Use this product within 6 months after receipt Condition : Temp: -10~+40℃ Humidity:15~85% 有效期：请在产品接收后的 6 个月内使用 存储环境：温度:-10~+40℃； 湿度:15%~85%

6. Picture/实物图片

Rev.	ECN Number	Description	Date	Drawn	Checkd	Approved
X2	ECN160930	FIRST RELEASE	05/17'16	熊志舜	熊谋	

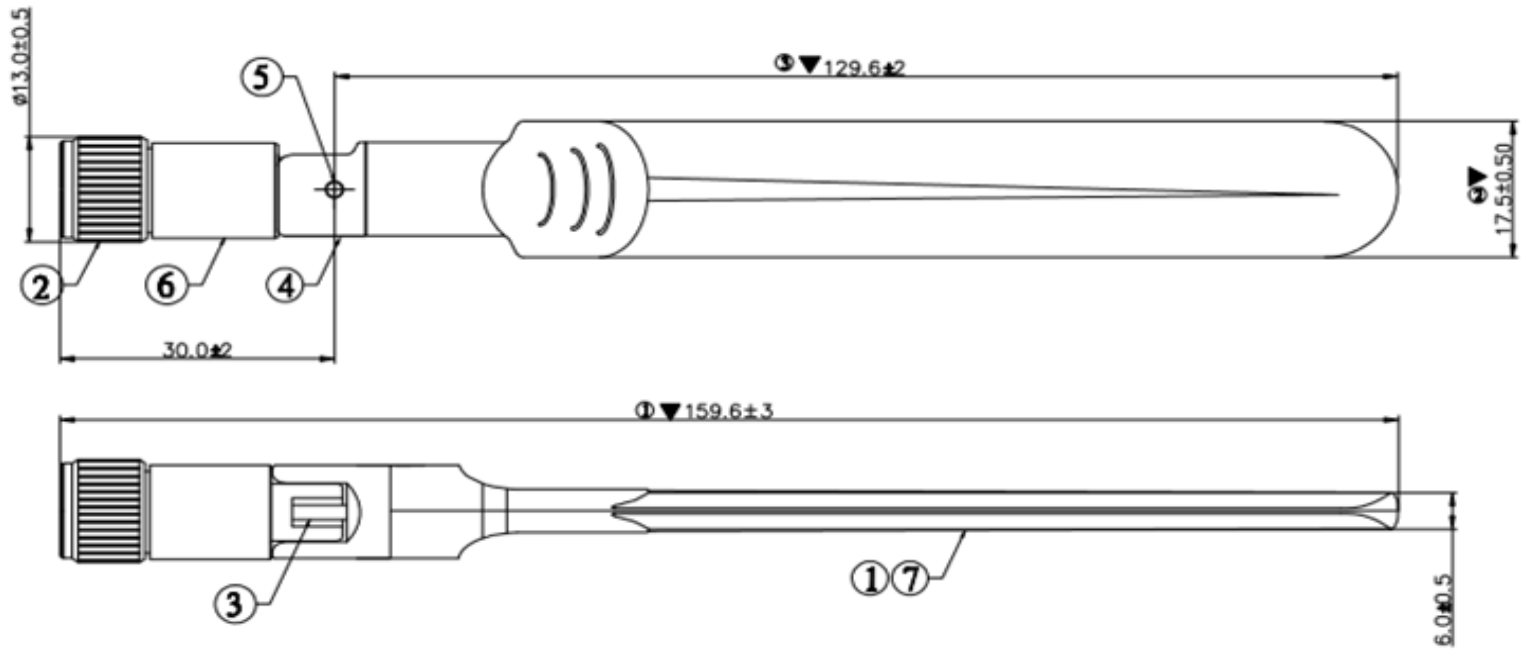

Specification:

1 Frequency Rang: 2.4GHZ~2.5GHZ/4.9GHz-5.825GHz
Return Loss: -9.0 dB or less
VSWR: 2.0 MAX

2. 标有 " ▼ " 为QC重点检测尺寸，标有 " [X] " 为要求做CPK检测尺寸；
3. 标有 " ⊗ " 为FAI首件全检尺寸；
4. 产品须符合本公司ROHS等相关测试要求。

NO	PART NAME	DESCRIPTION	Q'TY
7	PCB	FR-4,1.95*W13.5	1
6	Antenna Base	PC,Color:Black	1
5	Rivet	POM,Color:Black	2
4	Antenna Base	PC,Color:Black	1
3	Cable	RG-178 Cable,Transparency Brown,50Ω	1
2	Connector	SMA Plug Reverse For RG-178 Cable	1
1	Antenna Body	ABS,Color:Black	1

ELECTRIC CONNECTOR TECHNOLOGY

GENERAL TOLERANCE	
.X ±0.1	X. ±3.0
.XX ±0.5	XX. ±5.0
.XXX ±0.10	

SCALE: 1:1	DRAWN 熊志舜	DATE 05/13'16	DWG. NO. 600-T183-01
UNIT: MM	CHECK	DATE	PARTS NO.(INTENDED USE) 81800T183
SIZE: A4	APPROVE	DATE	

TITLE: 双频 Antenna Assembly 倒形天线

REV. X2

SHEET 1/1

REV.	ECN NUMBER	DESCRIPTION	DATE	DRAWN	CHECKED	APPROVED
X1	ECN160930	FIRST RELEASE	05/17'16	熊志辉	樊 谦	贾 峰

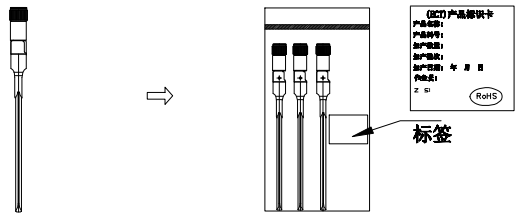

Packing:20pcs/bag

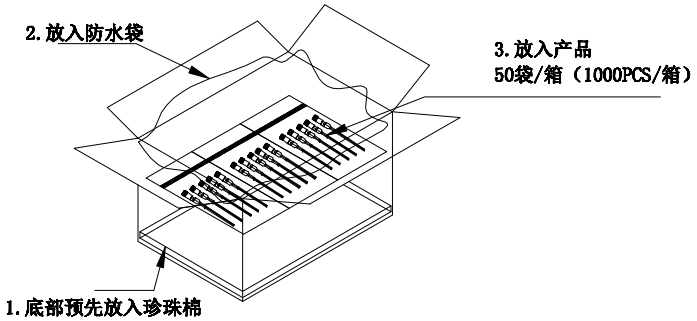

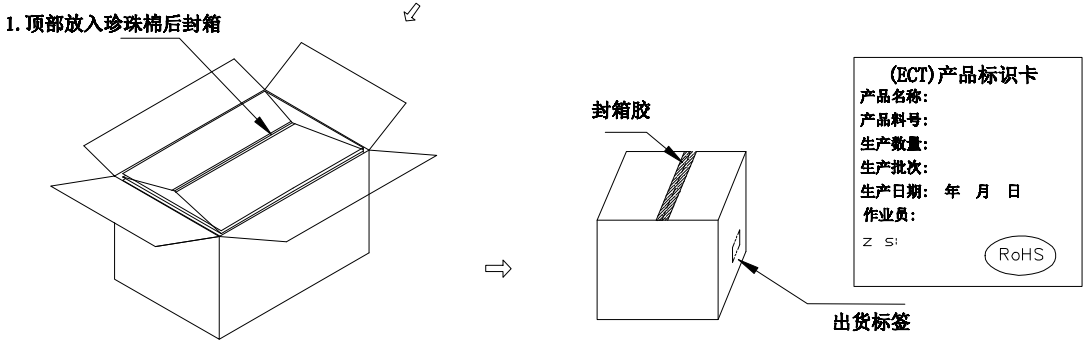

NOTES:

1. 包装时产品轻拿轻放，避免产品变形.
2. 整盘包装好后，检查是否有漏装，产品的放置方向是否正确.
3. 包装载带断裂时不可用人工连接.
4. 检查是否有产品被压死，检查整摞层数是否正确.
5. 若有未装满之零数箱，须以缓冲材塞满.
6. 防水袋封口须密封.
7. 整箱封好后，检查标签是否贴好，干净，字迹清晰，标签内容是否正确，完善.

包装材料			产品包装容量			产品包装重量		
项目	料号	数量	PCS/袋	袋/外箱	PCS/外箱	单重(g)	净重(kg)	总重(kg)
外纸箱		1	20	50	1000			
纸板		6						
PE袋		20						
载带								
上带								
三角纸板								
作业标签								
珍珠绵								
透明胶带								

ELECTRIC CONNECTOR TECHNOLOGY

GENERAL TOLERANCE	
XX.± 0.25	XX.°± 2°
X.± 0.20	X.°± 1°
.X± 0.13	.X°± 0.5°
.XX± 0.05	

SCALE: 1:1	DRAWN: 熊志辉	DATE: 05/17'16	DWG.NO: 551-T183-01	TITLE: 双频 Antenna Assembly 剑形天线	REV. X1
UNIT: mm	CHECK:	DATE:	PARTS NO.(INTENDED USE): 81800T183		SHEET: 1/1
SIZE: A4	APPROVE:	DATE:			

DIMENSION MEASUREMENT REPORT

DWG NAME 双频剑形天线 **REV: X2** **Production equipment code:** **WORK NO.:**

DWG P/N.: 81800T183 **Cav No.:** **Sample Q'ty:** 5 **PCS** **Test Reason:**

Measuring Tool: A: Vernier caliper **B:**Optical image measuring machine **C:**Microscope **D:**Ruler **E:**Jig **F:**Height gauge **TEST DATE:** 2016.05.13

Drawing Specification					Measurement results (unit:mm)						% Tolerance		STATUS		
DIM. DE	DRAWING ZONE	Dimension	+Tol	-Tol	1	2	3	4	5	Measuring Tool	Upper	Lower	High	Low	Remarks
	1	159.6	3.0	3.0	158.0	158.0	158.0	158.0	158.0	A	0%	53%		50%+	OK
	2	17.5	0.50	0.50	17.65	17.63	17.65	17.65	17.63	A	30%	0%			OK
	3	6.0	0.10	0.10	6.03	6.04	6.03	6.03	6.03	A	40%	0%			OK
	4	129.6	2.00	2.00	128.00	127.90	128.00	128.40	128.00	A	0%	85%		75%+	OK
	5	30.0	2.00	2.00	30.50	30.20	30.20	30.34	30.20	A	25%	0%			OK
	6	13.0	0.50	0.50	12.52	12.53	12.53	12.51	12.53	A	0%	98%		75%+	OK

Approved by : Lin Sheng **Checked by :Zhu Li** **Tested by: Yang Qin**

ROHS限用物质成分调查表

Vender(中文名/英文名):

SALEABLE PART				
物料料号	物料名称/型号	供应商料号	制造商名称	供应商绿色物料标识方法
81800T183	双频剑形天线		ECT	ROHS标签

SUB-PART

序号	名称(中文/英文)	料号(单体/单体中的物质成分料号或牌号)	单件产品使用量(g)	供应商	检测报告	限用物质含量PPM						SGS Report				备注(项目名称,组件P/N及其它)
	单体				有/无	铅	镉	汞	六价铬	PBB	PBDE	编号	出报告日期即生效日期	报告截止日期	查询网址	
1	上下盖	300-1000356/358-A	mg/kg	XYC	有	ND	ND	ND	ND	ND	ND	POLYLACPA-757	2015.12.14	2016.12.14	WWW.SGSGROUP.COM.CN	
2	上固	300-1000384-A	mg/kg	XYC	有	ND	ND	ND	ND	ND	ND	CANML1504465305	2015.8.4	2016.8.4	WWW.SGSGROUP.COM.CN	
3	线材	100-3000139-A	mg/kg	成佳	有	ND	ND	ND	//	//	//	SHAEC1602741006	2016.3.4	2017.3.4	WWW.SGSGROUP.COM.CN	
4	下固	300-1000017-A	mg/kg	XYC	有	ND	ND	ND	ND	ND	ND	CANML1504465305	2015.8.4	2016.8.4	WWW.SGSGROUP.COM.CN	
5	PE袋	400-1000023-A	mg/kg	永升	有	ND	ND	ND	ND	ND	ND	RHS01G007423003C	2015.06.21	2016.06.21	WWW.SGSGROUP.COM.CN	
6	锡条	500-4000016-A	mg/kg	BAOTAI	有	ND	ND	ND	ND	ND	ND	CANEC1514710102	2015.08.26	2016.08.26	WWW.SGSGROUP.COM.CN	

填写人：康槐清　　填写人部门/职务：品质主管　　填写日期：2016.5.16