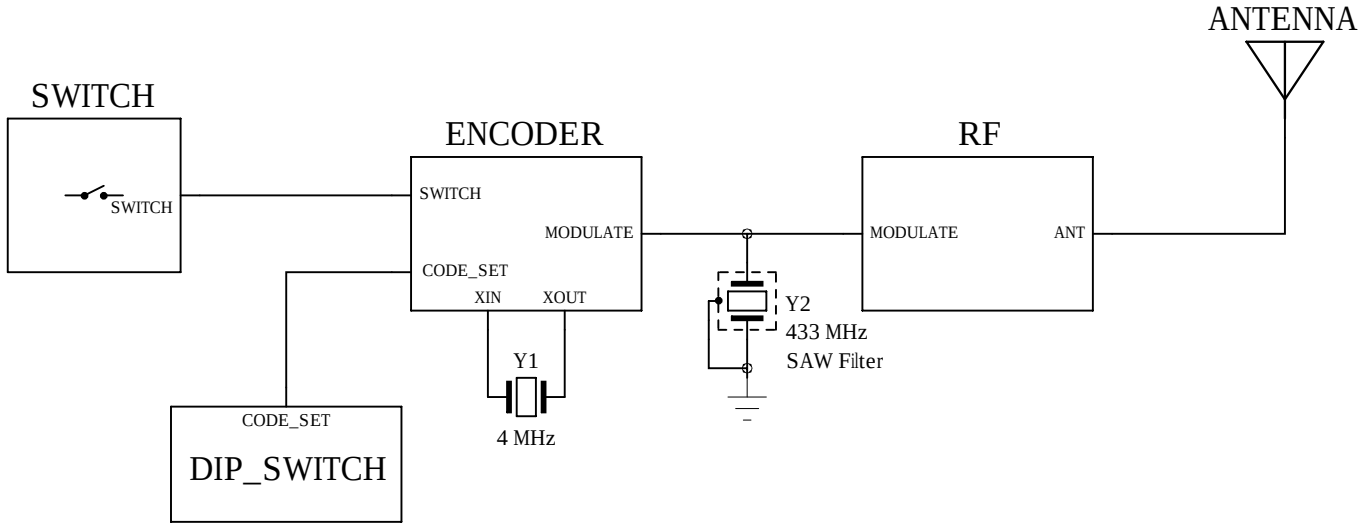

Kolf Industries (H.K.) Ltd.		
SCH FILE:	MODEL: TX/RX	
PCB FILE:	TITLE: Transmission Unit - Block Diagram	
DRAWN BY:		
APPROVED BY:	PART NO.:	
DATE: 11-Jan-2010	SHEET 1 OF 2	REV.: 1