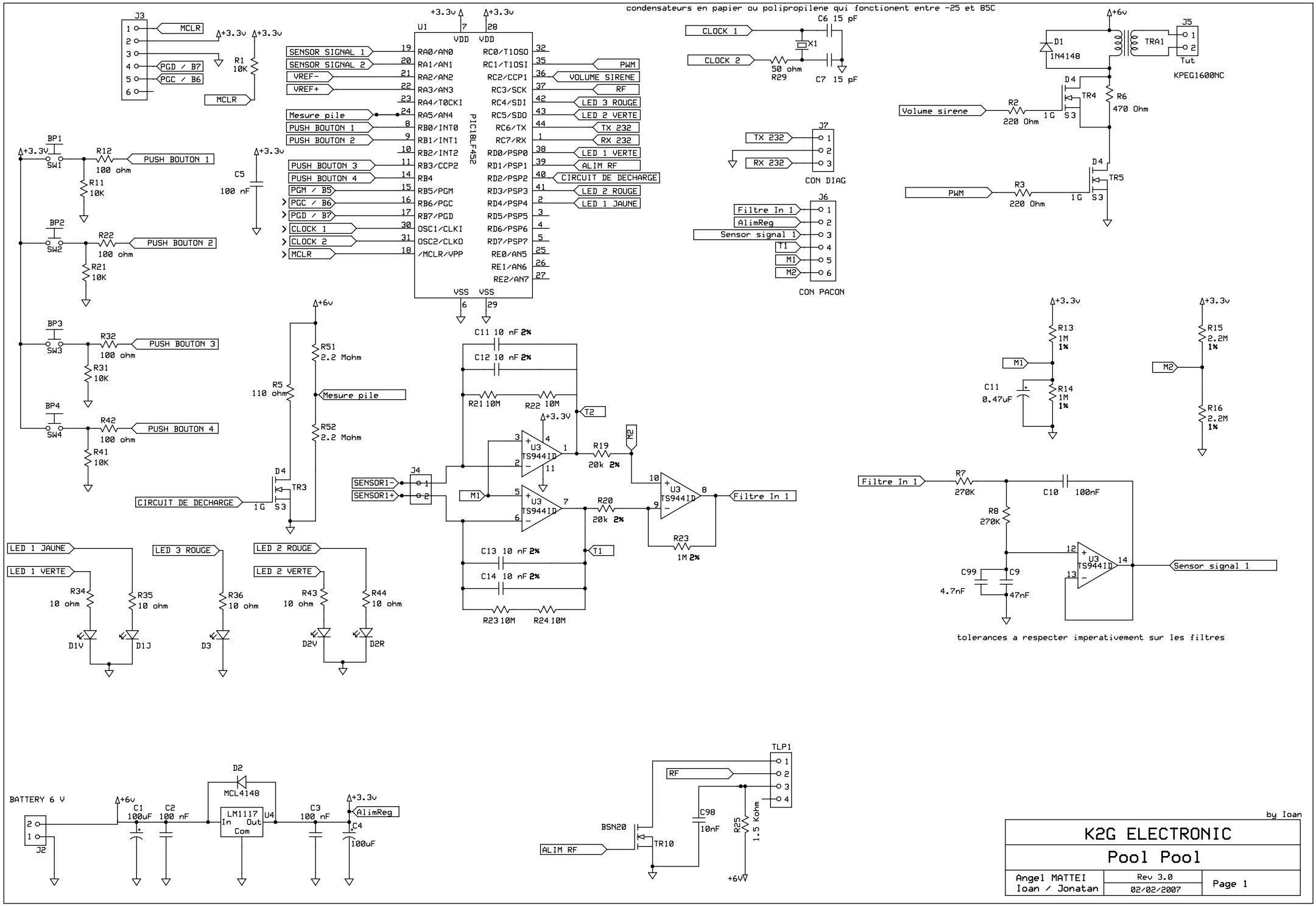

\\Altior333\tpa\HARDWARE\le nouveau v 1.0\Pool_Pool_V1_0.sch - Sheet1