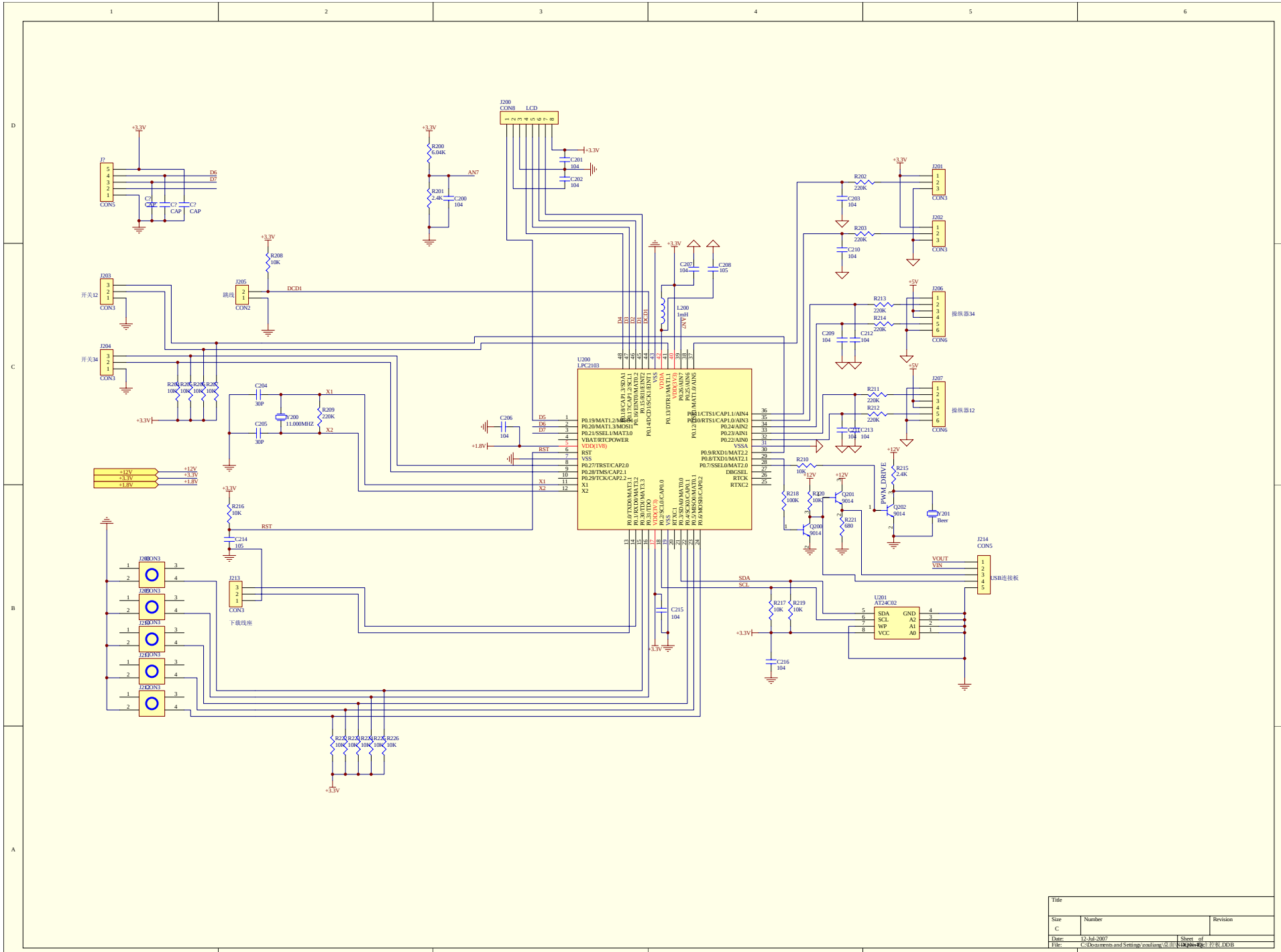
U200
LPC2103
J200
CON8
LCD
J7
CON5
J203
开关12
CON3
J204
开关34
CON3
J205
跳线
CON2
DCD1
J201
CON3
J202
CON3
J206
操纵器34
CON6
J207
操纵器12
CON6
J214
CON5
USB连接板
VOUT
VIN
J213
CON3
下载线座
J208
J209
J210
J211
U201
AT24C02
SDA
SCL
WP
VCC
GND
A2
A1
A0
PWM_DRIVE
Q200
9014
Q201
9014
Q202
9014
V201
Beer
Y200
11.000MHZ
RST
AN7
+3.3V
+5V
+12V
+1.8V
Title
Size
C
Number
Revision
Date:
12-Jul-2007
File:
C:\Documents and Settings\zouliang\桌面\NXP2103开发板.DDB

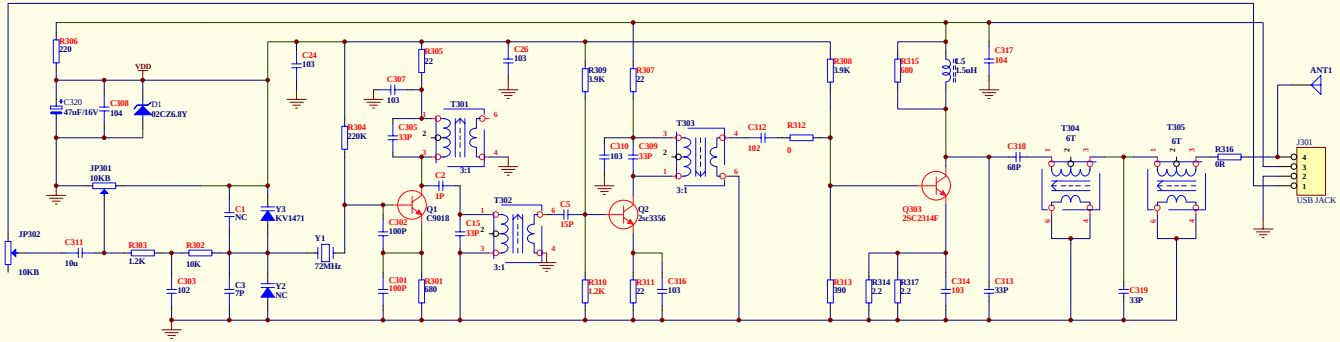

DIMENSIONAL	SCALE	CREATE DATE	VER.	PCB NO.
			V1.0	
DESIGNED	QTY	MATERIAL/FINISH		
ZKY				
APPROVED	PLATE	MODEL CODE/NAME		
SHEET	SIZE	PARTS CODE/NAME		
	B	高频头72_75MHz		

Guangzhou Chiyuan Electronic Co., LTD.

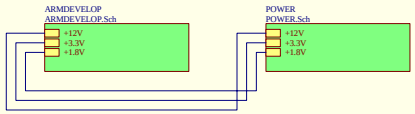

Title			
Size B	Number		Revision
Date: 12-Jul-2007		Sheet of	
File: C:\Documents and Settings\zouliang\桌面\ARMDEVELOP.DDB		Drawn By:	

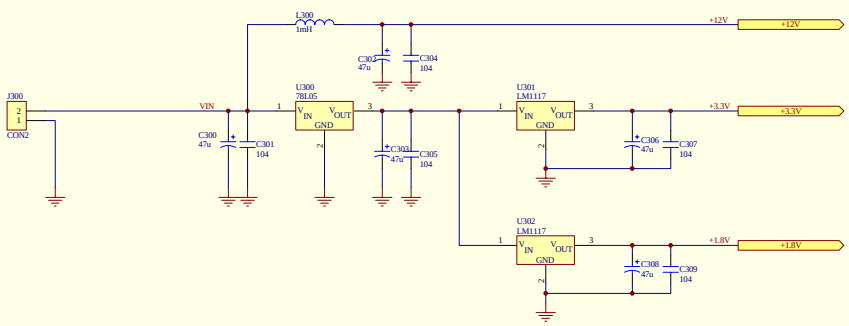

Title		
Size B	Number	Revision
Date: 12-Jul-2007	Sheet of	
File: C:\Documents and Settings\zouliang\桌面\KICAD\DDB\DDB.DDB		