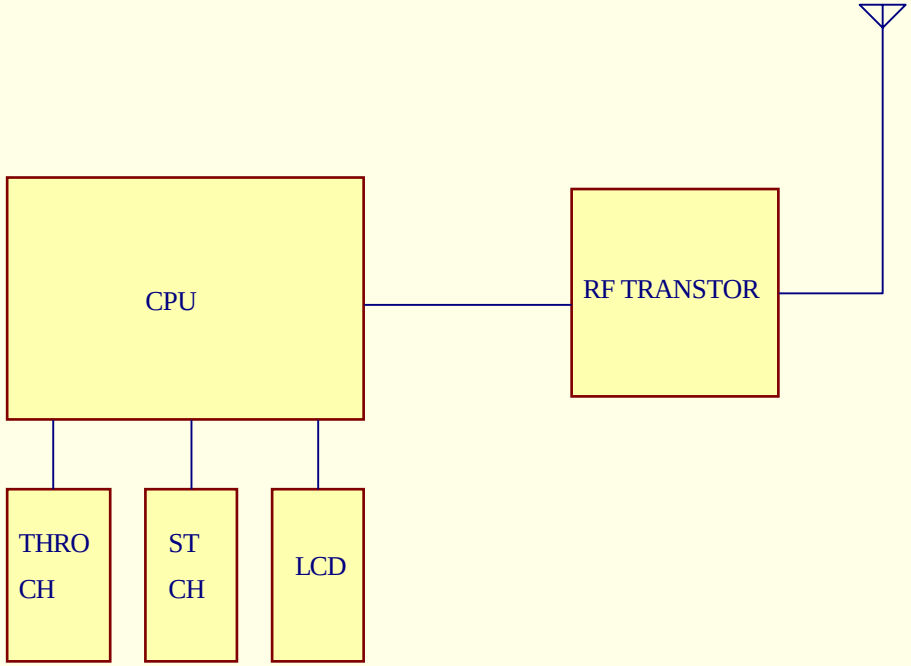

Title		
Size B	Number	Revision
Date: 19-Jan-2007	Sheet of	
File: C:\Program Files\Design Explorer 99 SE\Examples\POWERS.DDB	Drawn by:	