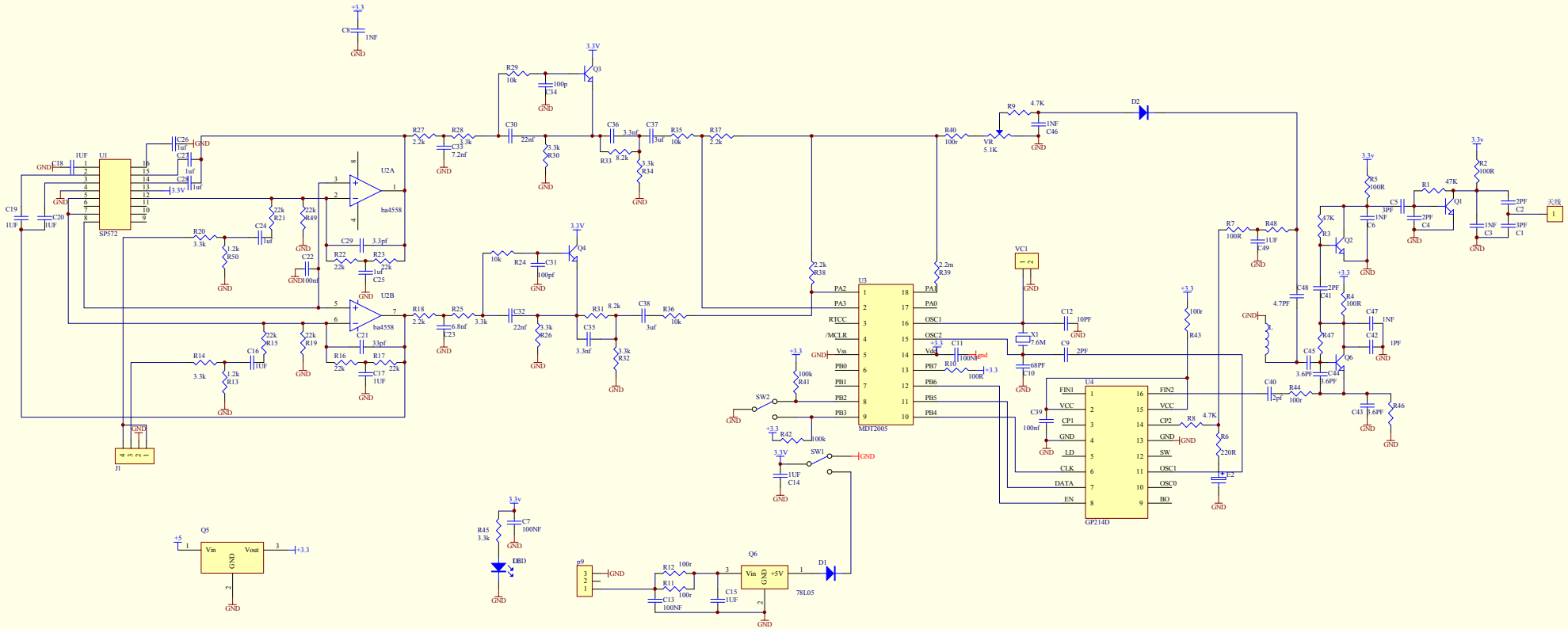

Title		
Size A2	Number	Revision
Date: 3-Sep-2007	Sheet of	
File: E:\work\..\HATX.Sch	Drawn By:	