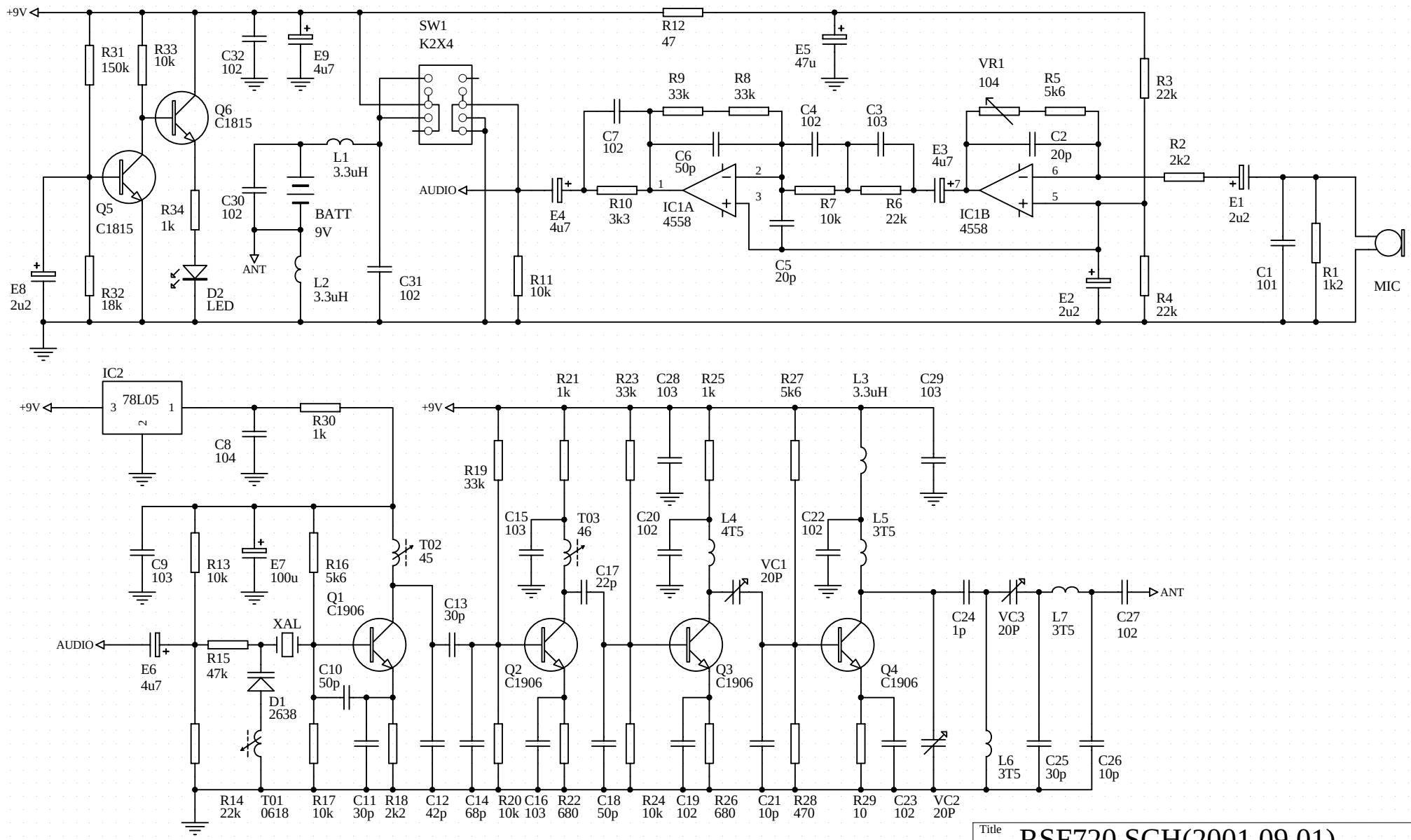

Circuit diagram of the transmitter

Title	RSF720.SCH(2001.09.01)		
Size A4	Number 2007.02.01		Revision
Date: 3-Feb-2007		Sheet of	
File: D:\BIL\..\RSF720.SCH		Drawn By:	