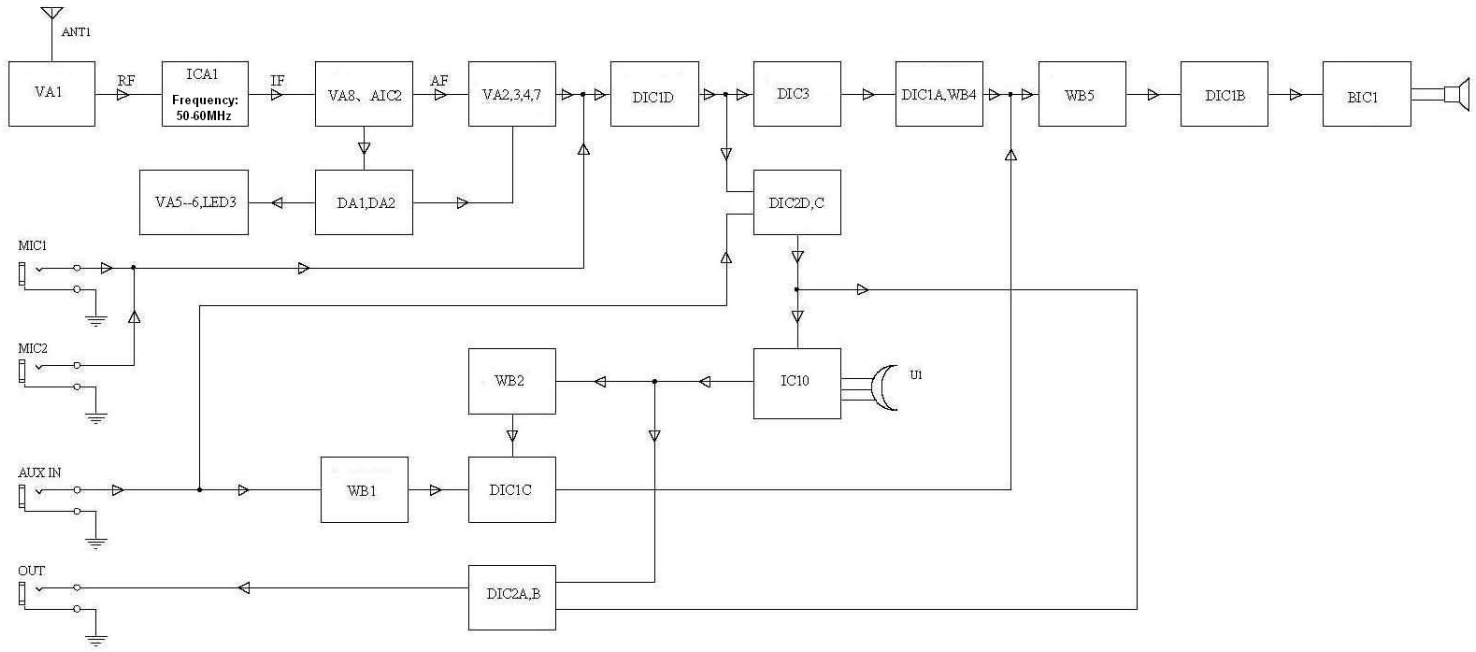

Title SH-996 Block diagram

Date: 6-Jun-2007 Sheet of

File: C:\PROGRAM FILES\DESIGN EXPLORER [illegible]\SAMPLES\996\[illegible].DDB