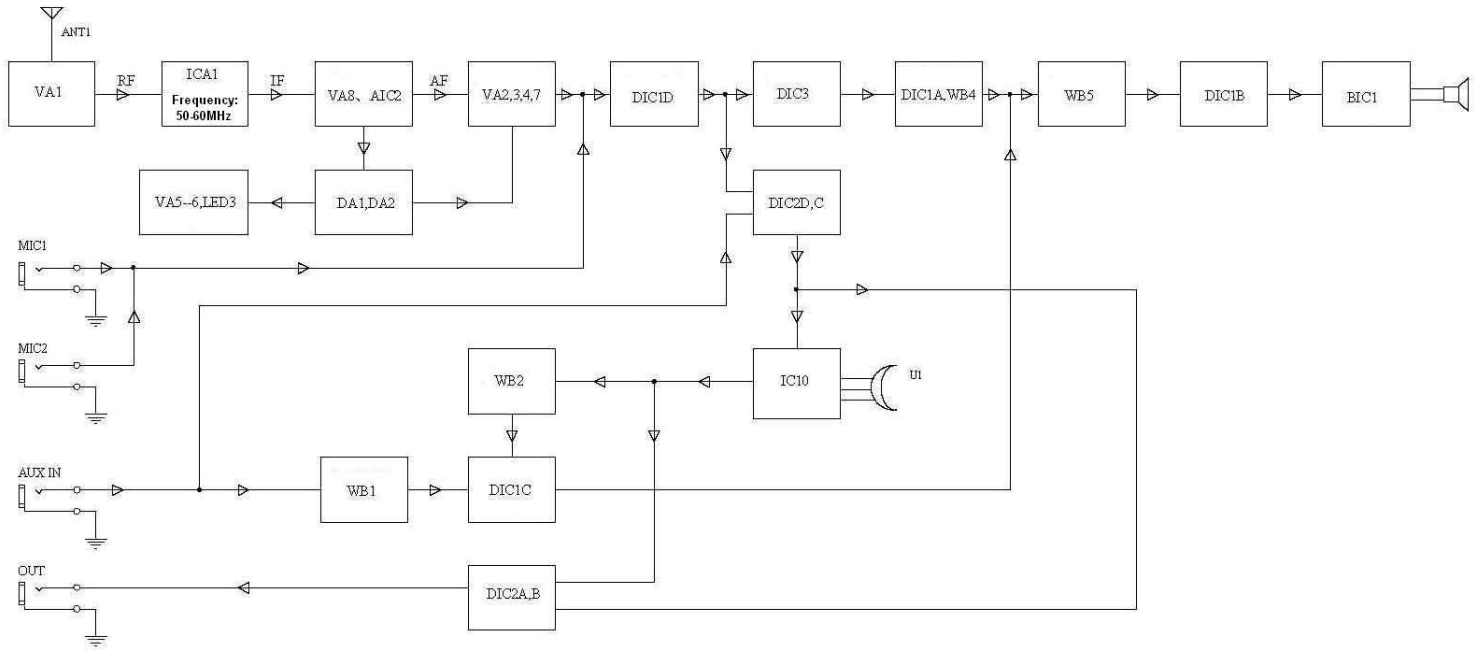

Title: **Block diagram**

Date: 6-Jun-2007 Sheet of

File: C:\PROGRAM FILES\DESIGN EXPLORER 99SE\EXAMPLES\99SE\7IM.DDB