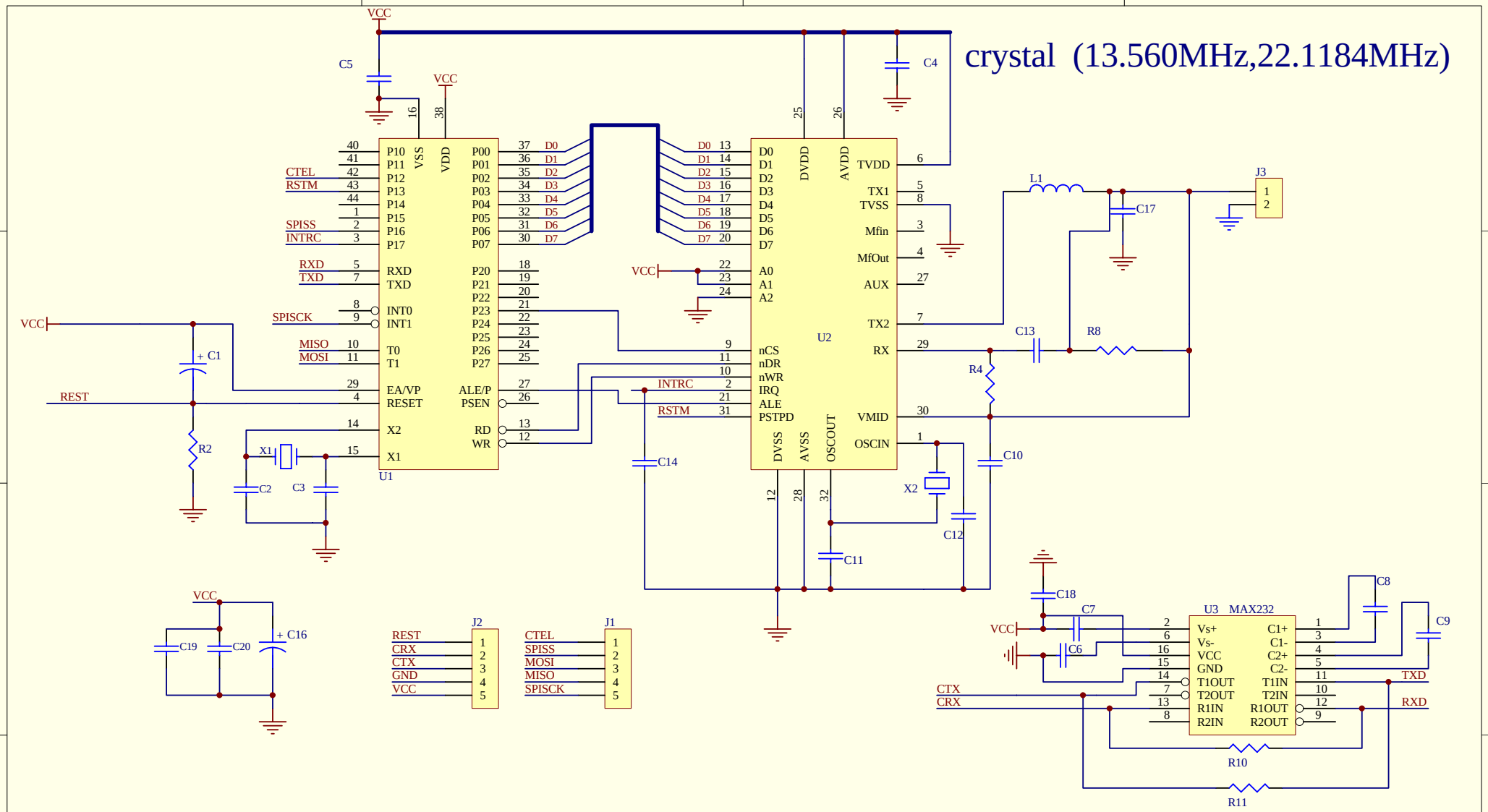
crystal (13.560MHz,22.1184MHz)
VCC
C5
C4
U1
U2
U3 MAX232
J1
J2
J3
L1
C17
C13
R8
R4
C10
C14
C11
C12
X1
X2
C1
C2
C3
R2
C16
C19
C20
C18
C7
C6
C8
C9
R10
R11
CTEL
RSTM
SPISS
INTRC
RXD
TXD
SPISCK
MISO
MOSI
REST
CRX
CTX
GND
TXD
RXD
Title
Size
A4
Number
Revision
Date: 19-Mar-2007
Sheet of
File: E:\新产品开发\RDM880SPI\RDM880SPI.Ddb
Drawn By: